GROVE
by Manitowoc

TMS9000E
Product Guide

Features

- 90 t (110 USt) capacity
- 11,2 m - 43,4 m (36 ft - 142 ft) five-section full power boom
- Patented TWIN-LOCK™ boom pinning system
- 10 m - 17 m (33 ft - 56 ft) bi-fold lattice swingaway extension
- Optional lattice insert extensions for a 72,2 m (237 ft) maximum tip height
- Tiltable superstructure cab
- Up to 21 300 kg (48,500 lb) counterweight with hydraulic removal system

GROVE TMS9000E

The TMS9000E is the premier truck-mounted crane in the industry. Features like the Grove MEGAFORM boom, optional extensions and counterweight removal system make the TMS9000E maneuverable and strong, making an impact on any jobsite.

Features

MEGAFORM™ boom
The Grove MEGAFORM™ boom shape eliminates weight and increases capacity compared to conventional shapes. The unique TWIN-LOCK™ boom pinning system automatically pins the sections in position using two horizontal large diameter pins. A single cylinder inside the boom reduces weight which has been used elsewhere to strengthen the machine.

Counterweight
Up to 21 999 kg (48,500 lb) of counterweight can be power installed and removed from the superstructure cab — allowing for easy transport to and from the job site.

Control system
Crane functions are controlled by ECOS (Electronic Crane Operating System) with CAN-BUS. The EKS5 load moment indicator provides detailed feedback and control of the crane's operating functions.

Outriggers
Two-stage inverted jack outriggers provide three position settings – 0%, 50% and 100%.

Power luffing extension
For improved up-and-over reach, a power luffing extension is available on the TMS9000E hydraulically offsettable from the superstructure cab, 5° to 40°.

Suspension
Standard front and rear air ride suspension provides a comfortable ride at 105 kph (65 mph).

CraneSTAR

CraneSTAR is an exclusive and innovative crane asset management system
that helps improve your profitability and reduce costs by remotely monitoring critical crane data.
Visit www.cranestar.com for more information.

Job site benefits

More productive in more places on the job site

- Multiple access points on the carrier for ease of access on the crane
- Standard hydraulic tilt cab 0°- 20° for exceptional visibility and operator comfort while working with long boom, inserts, and swingaway.
- Twinlock boom pinning system helps maximize the crane's load chart capacity by eliminating weight inside the extended boom.
- Inverted outrigger jacks protect the cylinder rods from being damaged on the jobsite as well as a longer seal life.
- Standard traction control provides improved traction on the jobsite.
- Available hydraulically offsettable 33-56 ft. bi-fold 5°-40° offset capability swingaway. This option is conveniently operated inside the cab and is easily stowed and erected using hydraulics.

Manitowoc Crane Care

Manitowoc Crane Care when you need it.
The assurance of the world's most advanced crane service and support to get you back to work fast.

Manitowoc Finance

Manitowoc Finance helps you get right to work generating profits for your business.
Financial tools that help you capitalize on opportunity with solutions that fit your needs.

Contents

Dimensions	5
Counterweight	6
Travel proposals	7
Working range-Main boom and lattice extension	8
Load charts-Main boom	9
Working range-Main boom, manual extension and inserts	12
Load charts-Main boom, manual extension and inserts	13
Working range-Main boom, hydraulic extension and inserts	15
Load charts-Main boom, hydraulic extension and inserts	16
Load handling	21
Working range-Main boom and manual extension (metric)	22
Load charts-Main boom (metric)	23
Working range-Main boom, manual extension and inserts (metric)	26
Load charts-Main boom, manual extension and inserts (metric)	27
Working range-Main boom, hydraulic extension and inserts (metric)	29
Load charts-Main boom, hydraulic extension and inserts (metric)	30
Specifications	33
Symbols glossary	35

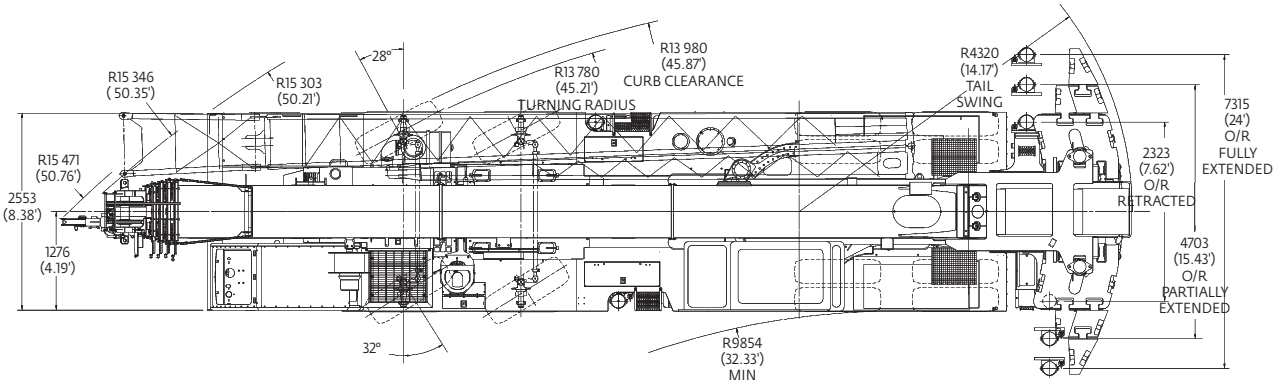

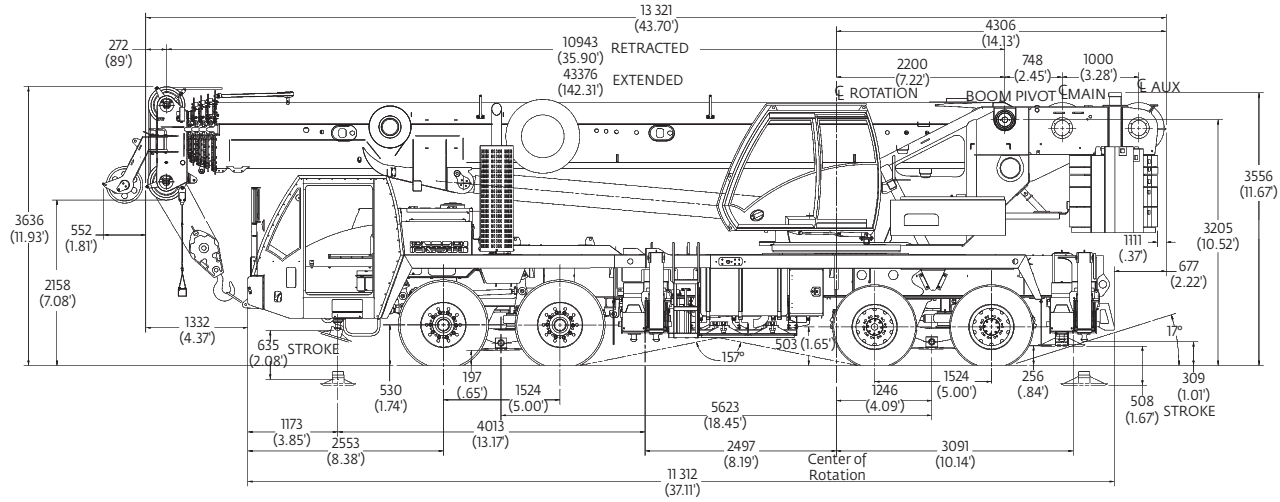

Dimensions shown in mm (ft)

Counterweight

Counterweight configurations

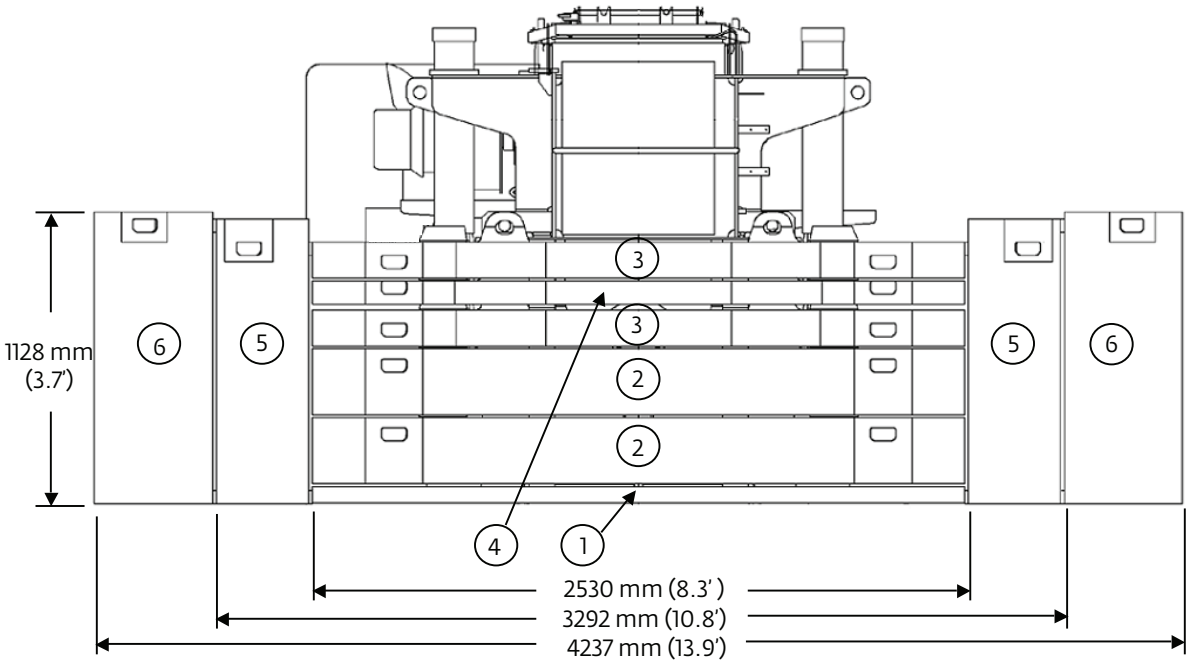

1. 1361 kg (3000 lb) baseplate
2. 4536 kg (10,000 lb) stackable
3. 2268 kg (5000 lb) pinned or stackable
4. 1361 kg (3000 lb) pinned or stackable
5. 1814 kg (4000 lb) wing
6. 1021 kg (2250 lb) wing

Load chart configurations						
	1	2	3	4	5	6
0						
2722 kg (6000 lb)	X			X		
4990 kg (11,000 lb)	X		X	X		
7258 kg (16,000 lb)	X		2X	X		
9525 kg (21,000 lb)	X	X	X	X		
11 793 kg (26,000 lb)	X	X	2X	X		
16 329 kg (36,000 lb)	X	2X	2X	X		
19 958 kg (44,000 lb)	X	2X	2X	X	2X	
21 999 kg (48,500 lb)	X	2X	2X	X	2X	2X

THIS CHART IS ONLY A GUIDE AND SHOULD NOT BE USED TO OPERATE THE CRANE.
The individual crane's load chart, operating instructions and other instructional plates must be read and understood prior to operating the crane.

Travel proposals

Boom over front

		Front (lb.)		Rear (lb.)		G.V.W. (lb.)
Basic machine: Includes ISX11.9 2013 on-highway engine, main and auxiliary hoists with rope, auxiliary boom nose, manual bifold swingaway, headache ball stowed, 40 USt hook block at bumper, no counterweight and driver.	20 538 kg	45,279	18 630 kg	41,071	39 168 kg	86,350
Add: 3000 lb counterweight on carrier deck and 3000 lb counterweight on superstructure. Total counterweight 6000 lb.	21 149 kg	46,626	20 758 kg	45,762	41 907 kg	92,388
Add: 3000 lb counterweight on carrier deck and 6000 lb counterweight on superstructure. Total counterweight 9000 lb.	20 568 kg	45,345	22 708 kg	50,062	43 276 kg	95,407
Add: 8000 lb counterweight on carrier deck and 8000 lb counterweight on superstructure. Total counterweight 16,000 lb.	22 165 kg	48,866	24 295 kg	53,560	46 460 kg	102,426
Add: 13,000 lb counterweight, 13,000 lb counterweight on superstructure. Boom telescoped 1 ft. Total counterweight 26,000 lb.	23 158 kg	51,055	27 829 kg	61,352	50 987 kg	112,407
Air conditioning - chassis and superstructure cabs	40 kg	88	36 kg	80	76 kg	168
Hydraulic bi-fold swingaway in lieu of the manual swingaway	185 kg	408	-6	-13	179 kg	395
QSM11 off-highway engine in lieu of standard ISX11.9 2013	-328 kg	-724	48 kg	105	-281 kg	-619
Maximum Allowable	22 317 kg	49,200	2 7216 kg	60,000	49 532 kg	109,200
Michelin Tires	23 224 kg	51,200	27 216 kg	60,000	50 440 kg	111,200

Trailing boom dolly

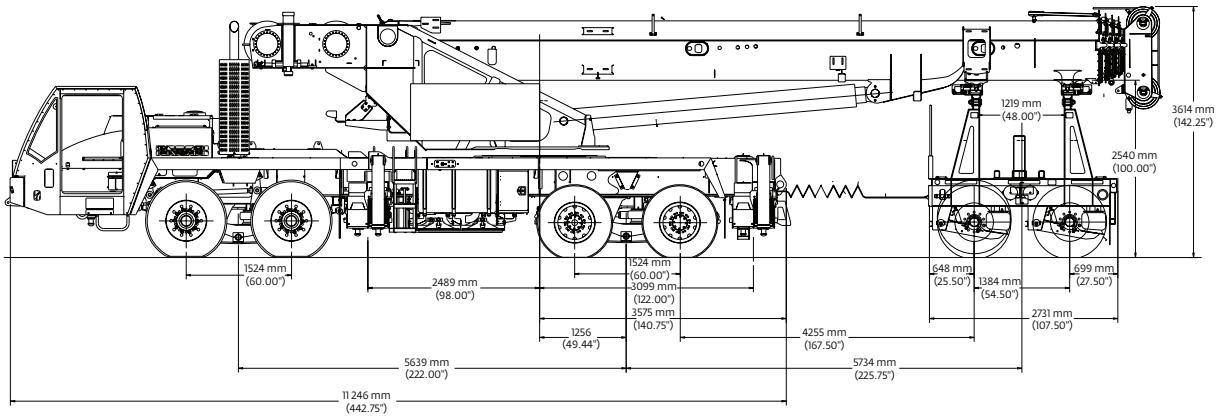

Unit configuration

	Front		Rear		Boom Dolly			G.V.W.
Basic machine: Includes ISX11.9 2013 on-highway engine, main and auxiliary hoists with rope, auxiliary boom nose, manual bifold swingaway, stowed headache ball, 40 USt hook block hanging at boom nose, no counterweight, driver and 6000 lb boom dolly.	17 204 kg	37,929 lb	14 604 kg	32,196 lb	10 114 kg	22,298 lb	41 922 kg	92,423 lb
Add: 6000 lb counterweight on front chassis deck, 5000 lb counterweight on rear chassis counterweight carrier, 15,000 lb on boom dolly. Total counterweight 26,000 lb.	18 827 kg	41,507 lb	17 996 kg	39,675 lb	16 927 kg	37,317 lb	53 750 kg	118,499 lb
Add: 8000 lb counterweight on front chassis deck, 5000 lb counterweight on rear chassis counterweight carrier, 23,000 lb on boom dolly. Total counterweight 36,000 lb.	19 617 kg	43,248 lb	18 113 kg	39,934 lb	20 573 kg	45,355 lb	58 303 kg	128,537 lb
Air conditioning - chassis and superstructure cabs	68 kg	150 lb	8 kg	18 lb	-	-	76 kg	168 lb
Hydraulic bi-fold swingaway in lieu of the manual swingaway (includes hose reel)	29 kg	64 lb	18 kg	39 lb	132 kg	291 lb	133 kg	292 lb
QSM11 off-highway engine in lieu of standard ISX11.9 2013	-329 kg	-724 lb	48 kg	105 lb	-	-	-281 kg	-619 lb

THIS CHART IS ONLY A GUIDE AND SHOULD NOT BE USED TO OPERATE THE CRANE.
The individual crane's load chart, operating instructions and other instructional plates must be read and understood prior to operating the crane.

Working range
Main boom and manual extension

36 ft - 142 ft main boom and manual lattice extension

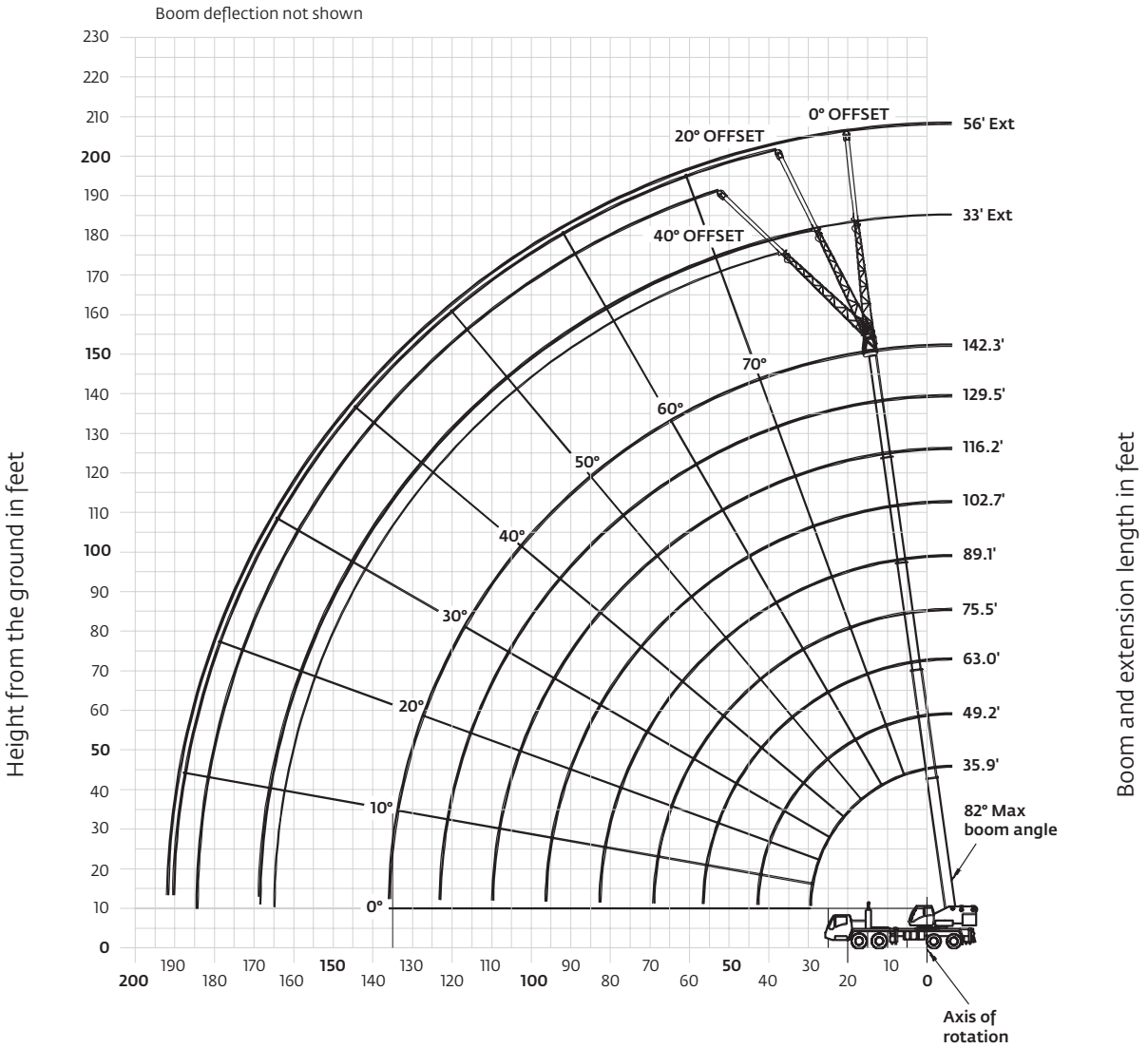

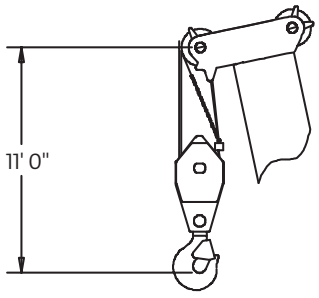

Dimensions area for largest Grove furnished hookblock and headache ball, with anti-two block activated.

THIS CHART IS ONLY A GUIDE AND SHOULD NOT BE USED TO OPERATE THE CRANE.
The individual crane's load chart, operating instructions and other instructional plates must be read and understood prior to operating the crane.

36 ft - 142 ft
Fixed lengths

48,500 lb

100%
24 ft 0 in

360°

Pounds (thousands)

Feet	35.9'	49.2'	63.0'	75.5'	89.1'	102.7'	116.2'	129.5'	142.3'
8	* 220,000								
9	*185000								
10	165,000	138,000	130,500	111,000	83,000				
12	151,000	138,000	129,500	111,000	83,000				
15	131,500	127,500	122,500	111,000	83,000	60,150			
20	105,500	105,500	101,000	99,400	81,500	60,150	44,500	33,450	
25	83,600	85,750	84,300	84,550	73,500	56,750	44,500	33,450	26,700
30		70,150	70,600	70,350	65,600	50,100	44,250	33,450	26,700
35		58,050	58,600	57,850	59,150	44,700	40,100	33,450	26,700
40		48,050	48,950	48,250	49,550	40,150	36,250	32,850	26,700
45			41,600	43,050	42,250	36,350	32,400	30,050	26,700
50			37,000	37,450	36,600	32,650	29,550	27,550	25,950
55			27,450	32,650	31,950	30,250	27,050	25,300	24,100
60				28,700	27,950	28,200	24,900	23,350	22,350
65				25,350	24,700	25,400	23,000	21,550	20,750
70					22,100	22,700	21,200	20,000	19,300
75					20,850	20,400	19,500	18,600	18,000
80					19,100	18,450	18,400	16,650	16,100
85						16,700	16,750	15,550	15,100
90						15,250	15,600	14,300	14,150
95						11,500	14,250	13,400	13,300
100							13,050	12,700	12,350
105							12,000	11,950	11,350
110								11,000	10,400
115								10,100	9570
120								9360	8780
125									8070
130									7420
135									4980
140									

*Requires special equipment.

36 ft - 142 ft
Fixed lengths

44,000 lb

100%
24 ft 0 in

360°

Pounds (thousands)

Feet	35.9'	49.2'	63.0'	75.5'	89.1'	102.7'	116.2'	129.5'	142.3'
10	165,000	138,000	130,500	111,000	83,000				
12	151,000	138,000	129,500	111,000	83,000				
15	131,500	127,500	122,500	111,000	83,000	60,150			
20	105,500	105,500	101,000	99,400	81,500	60,150	44,500	33,450	
25	82,900	84,900	83,600	84,550	73,500	56,750	44,500	33,450	26,700
30		68,050	68,650	68,200	65,600	50,100	44,250	33,450	26,700
35		56,000	56,450	55,700	57,050	44,700	40,100	33,450	26,700
40		46,500	47,100	47,450	47,700	40,150	36,250	32,850	26,700
45			40,300	41,500	40,650	36,350	32,400	30,050	26,700
50			35,600	35,550	34,700	32,650	29,550	27,550	25,950
55			27,450	30,800	30,050	30,250	27,050	25,300	24,100
60				27,000	26,250	27,000	24,900	23,350	22,350
65				23,850	23,550	23,850	22,350	21,550	20,750
70					22,050	21,300	20,700	20,000	19,300
75					19,800	19,100	19,400	18,050	18,000
80					17,900	17,250	17,500	16,150	16,100
85						15,650	15,950	15,050	15,100
90						14,250	14,550	14,200	13,800
95						11,500	13,250	13,150	12,550
100							12,150	12,050	11,450
105							11,100	11,050	10,450
110								10,150	9570
115								9330	8760
120								8590	8010
125									7330
130									6720
135									4980
140									

THIS CHART IS ONLY A GUIDE AND SHOULD NOT BE USED TO OPERATE THE CRANE.
The individual crane's load chart, operating instructions and other instructional plates must be read and understood prior to operating the crane.

Load charts

Main boom

36 ft - 142 ft
Fixed lengths

26,000 lb

100%
24 ft 0 in

360°

Pounds (thousands)

Feet	35.9'	49.2'	63.0'	75.5'	89.1'	102.7'	116.2'	129.5'	142.3'
10	165,000	138,000	130,500	111,000	83,000				
12	151,000	138,000	129,500	111,000	83,000				
15	128,500	127,500	122,500	111,000	83,000	60,150			
20	95,750	97,750	96,300	97,600	81,500	60,150	44,500	33,450	
25	72,700	74,650	75,250	74,750	73,500	56,750	44,500	33,450	26,700
30		58,850	59,100	59,700	59,750	50,100	44,250	33,450	26,700
35		46,850	47,850	47,700	46,800	44,700	40,100	33,450	26,700
40		37,500	38,650	38,500	37,650	38,350	36,250	32,850	26,700
45			32,100	31,950	31,900	32,000	30,300	30,050	26,700
50			27,150	27,100	27,850	27,050	27,350	25,900	25,950
55			21,850	24,250	24,050	23,250	23,550	23,350	22,700
60				21,300	20,950	21,250	20,500	20,350	19,700
65				18,750	18,450	18,700	18,300	17,850	17,200
70					16,400	16,600	16,200	15,900	15,250
75					14,750	14,950	14,550	14,150	13,500
80					13,350	13,400	13,000	12,600	11,950
85						12,050	11,650	11,250	10,600
90						10,900	10,500	10,100	9470
95						7430	9480	9070	8450
100							8580	8170	7550
105							7770	7360	6740
110								6640	6020
115								6000	5380
120								5400	4790
125									4260
130									3770
135									3330
140									

36 ft - 142 ft
Fixed lengths

11,000 lb

100%
24 ft 0 in

360°

Pounds (thousands)

Feet	35.9'	49.2'	63.0'	75.5'	89.1'	102.7'	116.2'	129.5'	142.3'
10	164,000	138,000	130,500	111,000	83,000				
12	147,000	138,000	129,500	111,000	83,000				
15	120,500	123,000	121,000	111,000	83,000	60,150			
20	84,900	86,900	87,500	86,750	81,500	60,150	44,500	33,450	
25	61,950	63,550	63,850	65,650	64,500	56,750	44,500	33,450	26,700
30		46,400	47,550	47,400	46,400	45,400	44,250	33,450	26,700
35		35,500	36,500	36,350	37,300	36,350	35,850	33,450	26,700
40		28,100	29,250	30,400	30,000	30,000	29,500	29,350	26,700
45			24,100	25,000	24,650	24,950	24,500	23,950	23,200
50			20,000	20,900	20,850	20,800	20,350	19,900	19,150
55			15,200	17,750	17,650	17,650	17,200	16,750	16,000
60				15,300	15,250	15,250	14,800	14,350	13,700
65				13,250	13,200	13,200	12,800	12,350	11,700
70					11,500	11,500	11,100	10,700	10,050
75					10,100	10,100	9730	9310	8660
80					8920	8930	8530	8110	7470
85						7890	7500	7080	6450
90						7000	6600	6190	5560
95						3750	5810	5400	4770
100							5120	4700	4080
105							4490	4090	3470
110								3530	2910
115								3040	2420
120								2580	1970
125									1560
130									1190
135									
140									

THIS CHART IS ONLY A GUIDE AND SHOULD NOT BE USED TO OPERATE THE CRANE.
The individual crane's load chart, operating instructions and other instructional plates must be read and understood prior to operating the crane.

Load chart
Main boom

36 ft - 142 ft Fixed lengths	0 lb	100% 24 ft 0 in	360°

Pounds (thousands)

Feet	35.9'	49.2'	63.0'	75.5'	89.1'	102.7'	116.2'	129.5'	142.3'
10	158,500	138,000	130,500	111,000	83,000				
12	141,500	138,000	129,500	111,000	83,000				
15	110,000	112,000	111,500	111,000	83,000	60,150			
20	75,800	77,850	78,200	78,900	79,000	60,150	44,500	33,450	
25	48,000	50,650	51,950	51,750	50,650	49,800	44,500	33,450	26,700
30		35,900	37,100	38,400	37,950	37,550	37,350	33,450	26,700
35		26,450	27,850	28,900	28,850	28,850	28,300	27,750	26,700
40		20,350	21,600	22,600	22,550	22,550	22,050	21,500	20,700
45			17,300	18,200	18,150	18,150	17,700	17,150	16,400
50			14,150	15,050	15,000	15,000	14,550	14,100	13,350
55			10,000	12,550	12,500	12,500	12,100	11,650	10,950
60				10,600	10,550	10,550	10,150	9710	9030
65				9040	8980	8980	8570	8140	7470
70					7670	7670	7260	6840	6180
75					6570	6560	6160	5740	5090
80					5620	5620	5230	4810	4170
85						4820	4420	4010	3370
90						4120	3720	3310	2680
95						1050	3100	2690	2070
100							2560	2150	1530
105							2070	1670	1050
110								1240	
115									
120									

THIS CHART IS ONLY A GUIDE AND SHOULD NOT BE USED TO OPERATE THE CRANE.
The individual crane's load chart, operating instructions and other instructional plates must be read and understood prior to operating the crane.

Working range

Main boom, manual extension and inserts

36 ft - 142 ft main boom, manual lattice extension and two 16 ft inserts

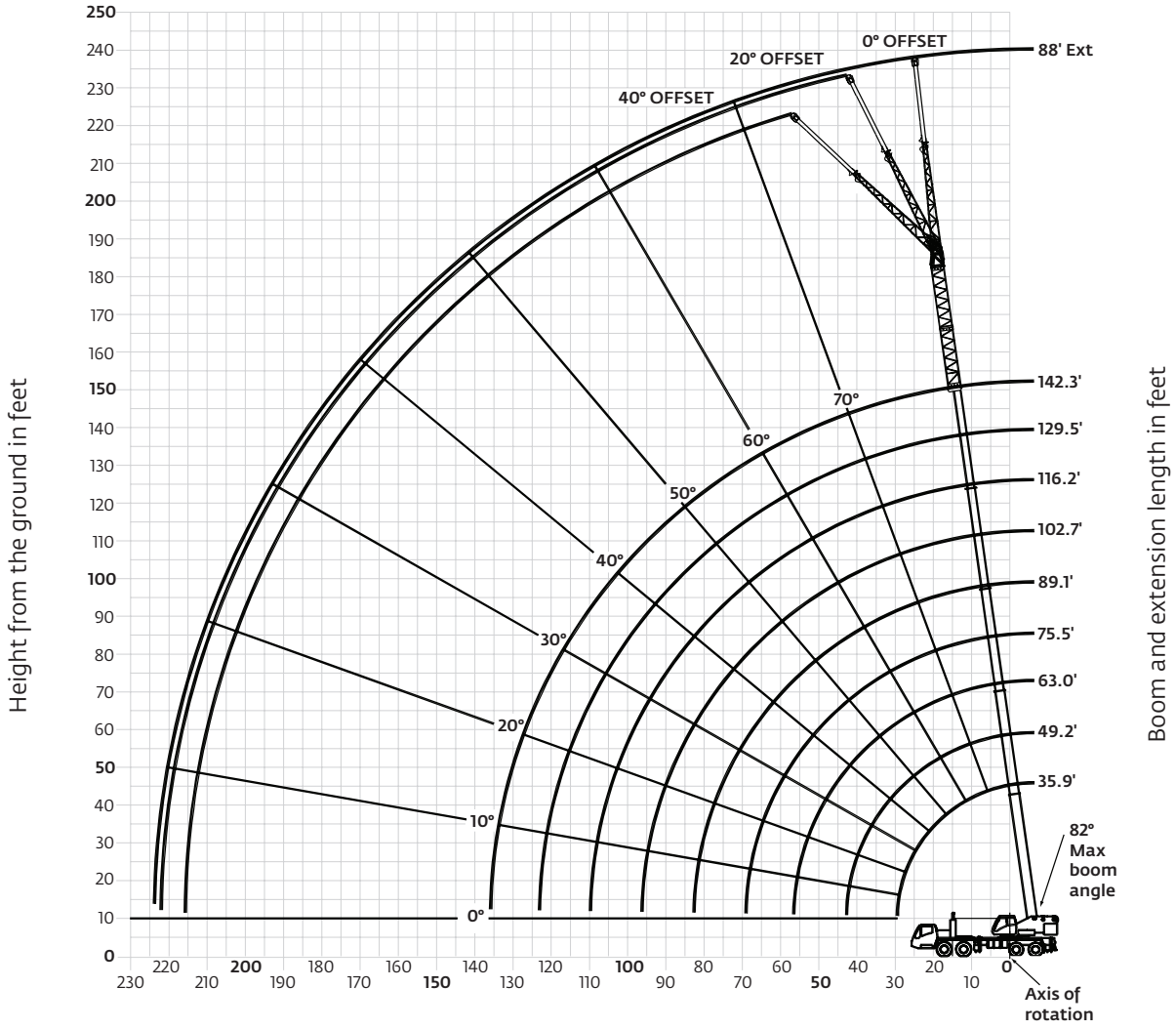

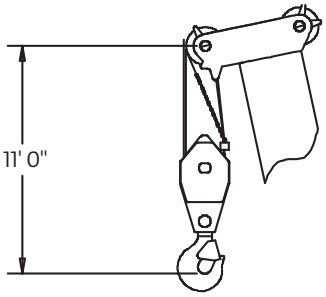

Dimensions area for largest Grove furnished hookblook and headache ball, with anti-two block activated.

THIS CHART IS ONLY A GUIDE AND SHOULD NOT BE USED TO OPERATE THE CRANE.
The individual crane's load chart, operating instructions and other instructional plates must be read and understood prior to operating the crane.

Load chart

Main boom, manual extension and inserts

142 ft
Fixed lengths

33 ft - 56 ft
72 ft - 88 ft
Manual offsettable swingaway

48,500 lb

100%
24 ft 0 in

360°

Pounds (thousands)

Feet	142.3' + 33'			142.3' + 56'			142.3' + 72'			142.3' + 88'		
	0°	20°	40°	0°	20°	40°	0°	20°	40°	0°	20°	40°
30	13,650											
35	13,650			8470								
40	13,650			8470								
45	13,650	14,200		8470			6920					
50	13,650	14,200	12,200	8470			6920			5520		
55	13,650	14,200	12,200	8470	8700		6920			5520		
60	13,650	14,200	12,200	8470	8670		6920	7440		5520		
65	13,650	14,200	12,200	8470	8620		6920	7440		5520		
70	13,650	14,100	12,200	8470	8380		6920	7440		5520	5680	
75	13,650	13,500	12,200	8470	8160	6750	6920	7440	6370	5520	5610	
80	12,950	12,900	12,200	8470	7940	6640	6920	7440	6370	5520	5550	5330
85	12,250	12,250	12,200	8470	7720	6530	6920	7430	6370	5520	5480	5330
90	11,600	11,600	11,850	8470	7530	6440	6920	7330	6370	5520	5420	5330
95	11,000	11,050	11,250	8470	7340	6350	6920	7240	6350	5520	5350	5330
100	10,450	10,500	10,700	8470	7170	6280	6920	7140	6270	5520	5290	5290
105	9860	9990	10,200	8470	7020	6210	6920	7040	6200	5440	5230	5240
110	9290	9510	9720	8340	6870	6140	6920	6840	6140	5350	5160	5200
115	8750	8980	9260	8100	6730	6090	6920	6630	6090	5270	5100	5150
120	8250	8470	8720	7770	6610	6050	6710	6430	6040	5180	5040	5110
125	7790	7990	8210	7420	6490	6010	6490	6240	6000	5100	4990	5050
130	7260	7520	7610	7090	6390	5990	6270	6050	5970	5010	4920	4990
135	6670	6890		6770	6290	5970	6020	5880	5950	4930	4850	4920
140	6130	6320		6460	6200	5970	5740	5710	5800	4840	4760	4860
145	5630	5780		6070	6130	5970	5470	5560	5660	4670	4600	4720
150	5160	5280		5600	6000	5970	5220	5410	5530	4520	4460	4580
155	4740	4820		5160	5520	5660	4980	5180	5410	4360	4320	4450
160	4340			4750	5070		4590	4950	5180	4220	4190	4320
165	3990			4370	4640		4200	4560	4720	4020	4060	4200
170				4020	4240		3840	4160		3760	3950	4090
175				3690	3860		3500	3790		3420	3770	3930
180				3380	3500		3190	3430		3100	3420	3550
185				3080			2890	3100		2800	3090	
190				1830			2620	2780		2510	2770	
195							2360	2480		2250	2470	
200							2120			2000	2190	
205							1910			1770	1920	
210										1550	1660	
215										1340		
220										1160		

THIS CHART IS ONLY A GUIDE AND SHOULD NOT BE USED TO OPERATE THE CRANE.
The individual crane's load chart, operating instructions and other instructional plates must be read and understood prior to operating the crane.

Load charts

Main boom, manual extension and inserts

142 ft
Fixed lengths

33 ft - 56 ft
72 ft - 88 ft
Manual offsettable swingaway

44,000 lb

100%
24 ft 0 in

360°

Pounds (thousands)

Feet	142.3' + 33'			142.3' + 56'			142.3' + 72'			142.3' + 88'		
	0°	20°	40°	0°	20°	40°	0°	20°	40°	0°	20°	40°
30	13,650											
35	13,650			8470								
40	13,650			8470								
45	13,650	14,200		8470			6920					
50	13,650	14,200	12,200	8470			6920			5520		
55	13,650	14,200	12,200	8470	8700		6920			5520		
60	13,650	14,200	12,200	8470	8670		6920	7440		5520		
65	13,650	14,200	12,200	8470	8620		6920	7440		5520		
70	13,650	14,100	12,200	8470	8380		6920	7440		5520	5680	
75	13,650	13,500	12,200	8470	8160	6750	6920	7440	6370	5520	5610	
80	12,950	12,900	12,200	8470	7940	6640	6920	7440	6370	5520	5550	5330
85	12,250	12,250	12,200	8470	7720	6530	6920	7430	6370	5520	5480	5330
90	11,600	11,600	11,850	8470	7530	6440	6920	7330	6370	5520	5420	5330
95	11,000	11,050	11,250	8470	7340	6350	6920	7240	6350	5520	5350	5330
100	10,450	10,500	10,700	8470	7170	6280	6920	7140	6270	5520	5290	5290
105	9860	9990	10,200	8470	7020	6210	6920	7040	6200	5440	5230	5240
110	9290	9510	9720	8340	6870	6140	6920	6840	6140	5350	5160	5200
115	8580	8940	9140	8100	6730	6090	6920	6630	6090	5270	5100	5150
120	7850	8170	8330	7770	6610	6050	6710	6430	6040	5180	5040	5110
125	7170	7460	7590	7420	6490	6010	6490	6240	6000	5100	4990	5050
130	6560	6810	6910	7040	6390	5990	6270	6050	5970	5010	4920	4990
135	5990	6220		6460	6290	5970	6020	5880	5950	4930	4850	4920
140	5480	5660		5940	6200	5970	5740	5710	5800	4840	4760	4860
145	5000	5150		5450	5890	5970	5300	5560	5660	4670	4600	4720
150	4560	4680		5000	5400	5590	4840	5320	5530	4520	4460	4580
155	4150	4240		4580	4930	5080	4420	4860	5090	4340	4320	4450
160	3780			4190	4500		4020	4420	4620	3950	4190	4320
165	3440			3830	4090		3660	4020	4170	3580	4000	4200
170				3490	3710		3310	3630		3230	3620	3810
175				3170	3350		2990	3280		2900	3260	3420
180				2880	3000		2690	2940		2600	2920	3050
185				2620			2410	2620		2310	2600	
190				1830			2150	2310		2040	2300	
195							1900	2020		1790	2010	
200							1680			1560	1740	
205							1480			1330	1480	
210										1120	1230	

142 ft
Fixed lengths

33 ft - 56 ft
72 ft - 88 ft
Manual offsettable swingaway

26,000 lb

100%
24 ft 0 in

360°

Pounds (thousands)

Feet	142.3' + 33'			142.3' + 56'			142.3' + 72'			142.3' + 88'		
	0°	20°	40°	0°	20°	40°	0°	20°	40°	0°	20°	40°
30	13,650											
35	13,650			8470								
40	13,650			8470								
45	13,650	14,200		6920			6920					
50	13,650	14,200	12,200	8470			6920			5520		
55	13,650	14,200	12,200	8470	8700		6920			5520		
60	13,650	14,200	12,200	8470	8670		6920	7440		5520		
65	13,650	14,200	12,200	8470	8620		6920	7440		5520		
70	13,650	14,100	12,200	8470	8380		6920	7440		5520	5680	
75	13,400	13,500	12,200	8470	8160	6750	6920	7440	6370	5520	5610	
80	11,900	12,600	12,200	8470	7940	6640	6920	7440	6370	5520	5550	5330
85	10,550	11,200	11,650	8470	7720	6530	6920	7430	6370	5520	5480	5330
90	9380	9990	10,400	8470	7530	6440	6920	7330	6370	5520	5420	5330
95	8350	8900	9260	8470	7340	6350	6920	7240	6350	5520	5350	5330
100	7440	7940	8250	8000	7170	6280	6920	7140	6270	5520	5290	5290
105	6620	7070	7350	7180	7020	6210	6920	7040	6200	5440	5230	5240
110	5890	6300	6540	6430	6870	6140	6330	6840	6140	5350	5160	5200
115	5240	5600	5800	5760	6540	6090	5650	6490	6090	5270	5100	5150
120	4640	4970	5130	5160	5870	6050	5040	5820	6040	5000	5040	5110
125	4100	4390	4520	4600	5260	5700	4480	5200	5720	4440	4990	5050
130	3600	3860	3960	4100	4700	5090	3970	4640	5100	3930	4650	4990
135	3150	3380		3640	4190	4520	3510	4120	4540	3450	4130	4590
140	2740	2930		3210	3710	4000	3070	3650	4010	3020	3650	4070
145	2350	2510		2820	3270	3510	2680	3210	3530	2620	3200	3590
150	2000	2130		2460	2860	3060	2310	2800	3080	2250	2790	3130
155	1680	1770		2120	2480	2630	1970	2410	2650	1900	2410	2710
160	1390			1810	2130		1650	2060	2260	1580	2050	2320
165	1120			1520	1790		1360	1720	1880	1290	1710	1950
170				1250	1480		1080	1410		1010	1400	1600
175				1000	1180			1110			1110	1270

THIS CHART IS ONLY A GUIDE AND SHOULD NOT BE USED TO OPERATE THE CRANE.

The individual crane's load chart, operating instructions and other instructional plates must be read and understood prior to operating the crane.

33 ft -56 ft main boom, hydraulic lattice extension and two 16 ft inserts

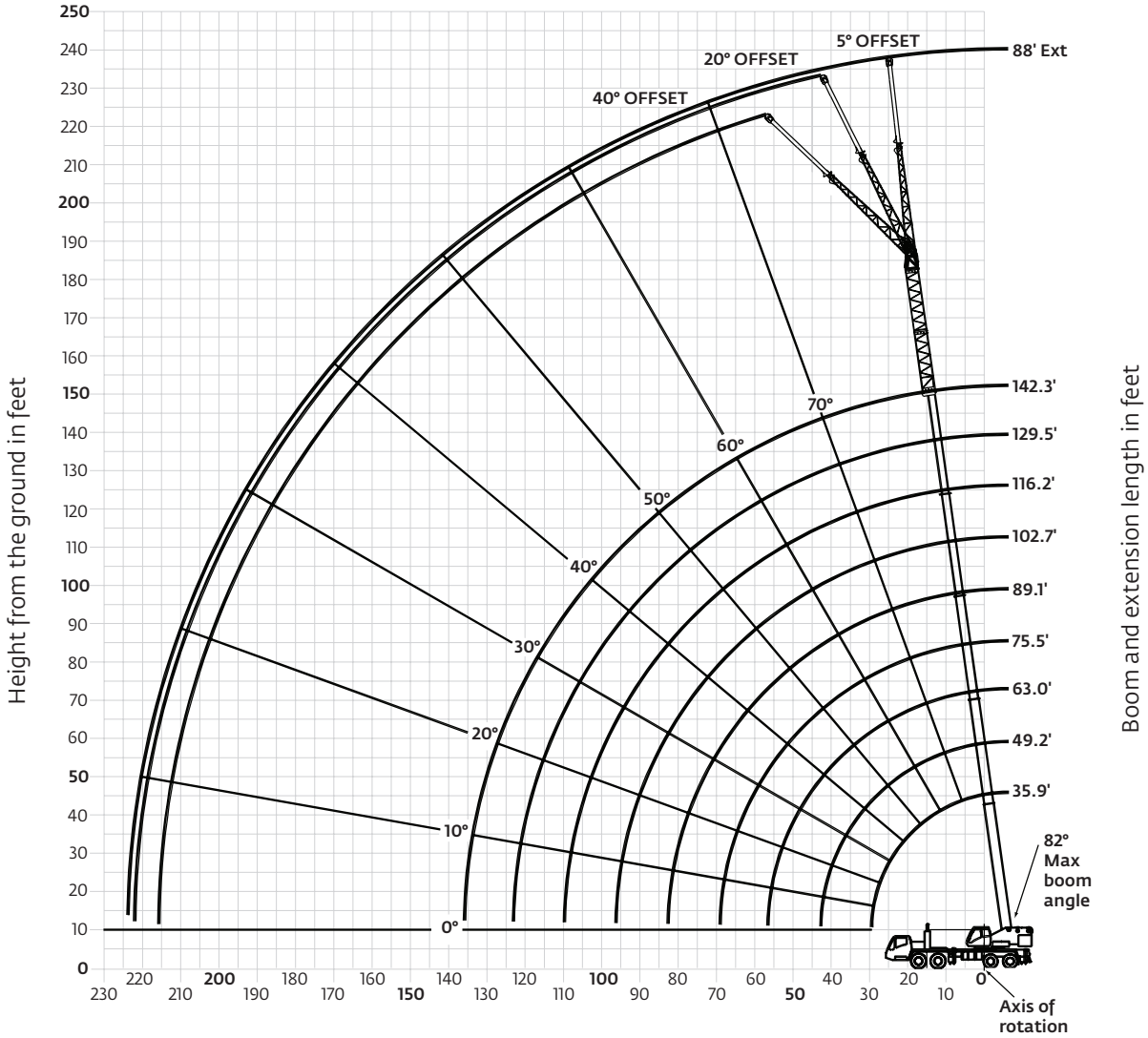

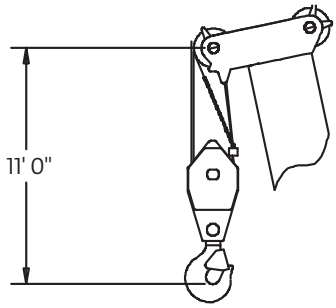

Dimensions area for largest Grove furnished hookblook and headache ball, with anti-two block activated.

THIS CHART IS ONLY A GUIDE AND SHOULD NOT BE USED TO OPERATE THE CRANE.
The individual crane's load chart, operating instructions and other instructional plates must be read and understood prior to operating the crane.

Load chart

Main boom, hydraulic extension and inserts

142 ft
Fixed lengths

33 ft - 56 ft
72 ft - 88 ft
Hydraulic luffing
swingaway/stationary

48,500 lb

100%
24 ft 0 in

360°

Pounds (thousands)

Feet	142.3' + 33'			142.3' + 56'			142.3' + 72'			142.3' + 88'		
	5°	5°-20°	20°-40°	5°	5°-20°	20°-40°	5°	5°-20°	20°-40°	5°	5°-20°	20°-40°
35	13,800											
40	13,800			8600								
45	13,800	13,800		8600								
50	13,800	13,800	12,200	8600			7000			5520		
55	13,800	13,800	12,000	8600	8600		7000			5520		
60	13,800	13,800	12,200	8600	8600		7000	7000		5520		
65	13,800	13,800	12,200	8600	8600		7000	7000		5520		
70	13,800	13,800	12,200	8600	8380		7000	7000		5520	5520	
75	13,600	13,450	12,200	8600	8160	6750	7000	7000	6360	5520	5520	
80	12,900	12,850	12,200	8600	7930	6640	7000	7000	6360	5520	5520	5300
85	12,200	12,200	12,200	8600	7720	6530	7000	7000	6360	5520	5460	5300
90	11,550	11,550	11,550	8600	7530	6440	7000	7000	6360	5520	5400	5300
95	10,950	10,950	11,000	8600	7340	6350	7000	7000	6350	5520	5330	5300
100	10,400	10,400	10,450	8370	7170	6270	7000	7000	6270	5440	5270	5270
105	9870	9870	9940	8130	7010	6200	7000	7000	6200	5350	5210	5210
110	9290	9290	9460	7890	6870	6140	7000	6810	6140	5270	5140	5140
115	8750	8750	8930	7670	6730	6090	6800	6600	6090	5180	5080	5080
120	8250	8250	8420	7460	6610	6050	6580	6400	6040	5100	5020	5020
125	7780	7780	7940	7260	6490	6010	6360	6200	6000	5020	4970	4970
130	7280	7280	7460	7080	6390	5990	6160	6020	5970	4940	4890	4890
135	6680	6680		6760	6260	5970	5960	5840	5840	4860	4820	4820
140	6130	6130		6470	6200	5970	5730	5680	5680	4760	4720	4720
145	5620	5620		6150	6130	5970	5460	5460	5520	4600	4570	4570
150	5150	5150		5660	5660	5950	5210	5210	5370	4450	4420	4420
155	4710	4710		5210	5210	5470	4970	4970	5130	4300	4280	4280
160	4310			4790	4790		4630	4630	4890	4160	4150	4150
165	3940			4400	4400		4240	4240	4500	4020	4020	4020
170				4040	4040		3870	3870		3800	3800	3910
175				3690	3690		3520	3520		3450	3450	3710
180				3370	3370		3200	3200		3120	3120	3350
185				3040			2860	2860		2790	2790	
190							2540	2540		2460	2460	
195							2230	2230		2160	2160	
200							1940			1870	1870	
205							1660			1590	1590	
210										1330	1330	
215										1080		

THIS CHART IS ONLY A GUIDE AND SHOULD NOT BE USED TO OPERATE THE CRANE.
The individual crane's load chart, operating instructions and other instructional plates must be read and understood prior to operating the crane.

Load chart

Main boom, hydraulic extension and inserts

142 ft
Fixed lengths

33 ft - 56 ft
72 ft - 88 ft
Hydraulic luffing
swingaway/loads luffing

48,500 lb

100%
24 ft 0 in

360°

Pounds (thousands)

Feet	142.3' + 33'		142.3' + 56'		142.3' + 72'		142.3' + 88'	
	5°-20°	20°-40°	5°-20°	20°-40°	5°-20°	20°-40°	5°-20°	20°-40°
35								
40								
45	13,800							
50	13,800	12,200						
55	13,800	12,200	8130					
60	13,800	11,950	7790		7000			
65	13,350	11,700	7490		7000			
70	12,900	11,500	7210		6810		5520	
75	12,450	11,350	6940	6000	6600	5,470	5520	
80	12,100	11,150	6690	5880	6410	5380	5520	4960
85	11,750	11,000	6460	5760	6230	5290	5460	4890
90	11,400	10,850	6260	5660	6050	5210	5400	4820
95	10,950	10,750	6060	5550	5880	5140	5330	4760
100	10,400	10,450	5880	5460	5730	5070	5270	4700
105	9870	9940	5700	5380	5580	5000	5210	4640
110	9290	9460	5550	5300	5450	4940	5140	4590
115	8750	8930	5400	5230	5320	4880	5080	4540
120	8250	8420	5260	5170	5200	4830	5020	4500
125	7780	7940	5130	5110	5080	4780	4970	4450
130	7280	7460	5010	5010	4970	4730	4890	4410
135	6680		4900	4900	4870	4690	4810	4380
140	6130		4780	4790	4780	4660	4720	4340
145	5620		4630	4690	4690	4620	4570	4310
150	5150		4480	4610	4540	4600	4420	4290
155	4710		4340	4520	4410	4520	4280	4260
160			4220		4290	4450	4150	4150
165			4090		4170	4380	4020	4020
170			3980		3870		3800	3910
175			3690		3520		3450	3710
180			3370		3200		3120	3350
185					2860		2790	
190					2540		2460	
195					2230		2160	
200							1870	
205							1590	
210							1330	
215								

THIS CHART IS ONLY A GUIDE AND SHOULD NOT BE USED TO OPERATE THE CRANE.
The individual crane's load chart, operating instructions and other instructional plates must be read and understood prior to operating the crane.

Load chart

Main boom, hydraulic extension and inserts

142 ft
Fixed lengths

33 ft - 56 ft
72 ft - 88 ft
Hydraulic luffing
swingaway/stationary

44,000 lb

100%
24 ft 0 in

360°

Pounds (thousands)

Feet	142.3' + 33'			142.3' + 56'			142.3' + 72'			142.3' + 88'		
	5°	5°-20°	20°-40°	5°	5°-20°	20°-40°	5°	5°-20°	20°-40°	5°	5°-20°	20°-40°
35	13,800											
40	13,800			8600								
45	13,800	13,800		8600								
50	13,800	13,800	12,200	8600			7000			5520		
55	13,800	13,800	12,200	8600	8600		7000			5520		
60	13,800	13,800	12,200	8600	8600		7000	7000		5520		
65	13,800	13,800	12,200	8600	8600		7000	7000		5520		
65	13,800	13,800	12,200	8600	8600		7000	7000		5520		
70	13,800	13,800	12,200	8600	8380		7000	7000		5520	5520	
75	13,600	13,450	12,200	8600	8160	6750	7000	7000	6360	5520	5520	
80	12,900	12,850	12,200	8600	7930	6640	7000	7000	6360	5520	5520	5300
85	12,200	12,200	12,200	8600	7720	6530	7000	7000	6360	5520	5460	5300
90	11,550	11,550	11,550	8600	7530	6440	7000	7000	6360	5520	5400	5300
95	10,950	10,950	11,000	8600	7340	6350	7000	7000	6350	5520	5330	5300
100	10,400	10,400	10,450	8370	7170	6270	7000	7000	6270	5440	5270	5270
105	9870	9870	9940	8130	7010	6200	7000	7000	6200	5350	5210	5210
110	9290	9290	9460	7890	6870	6140	7000	6810	6140	5270	5140	5140
115	8630	8630	8890	7670	6730	6090	6800	6600	6090	5180	5080	5080
120	7880	7880	8110	7460	6610	6050	6580	6400	6040	5100	5020	5020
125	7200	7200	7400	7260	6490	6010	6360	6200	6000	5020	4970	4970
130	6580	6580	6750	7080	6390	5990	6160	6020	5970	4940	4890	4890
135	6000	6000		6560	6290	5970	5960	5840	5840	4860	4820	4820
140	5480	5480		6020	6020	5970	5730	5680	5680	4760	4720	4720
145	4990	4990		5520	5520	5850	5370	5370	5520	4600	4570	4570
150	4540	4540		5060	5060	5350	4910	4910	5260	4450	4420	4420
155	4130	4130		4630	4630	4890	4470	4470	4790	4300	4280	4280
160	3740			4230	4230		4070	4070	4360	4010	4010	4150
165	3390			3860	3860		3690	3690	3950	3630	3630	3930
170				3510	3510		3340	3340		3270	3270	3550
175				3180	3280		3010	3010		2940	2940	3190
180				2880	2880		2700	2700		2620	2620	2860
185				2590			2410	2410		2330	2330	
190							2,130	2130		2050	2050	
195							1880	1880		1790	1790	
200							1600			1530	1530	
205							1330			1260	1260	
210										1010	1010	

THIS CHART IS ONLY A GUIDE AND SHOULD NOT BE USED TO OPERATE THE CRANE.
The individual crane's load chart, operating instructions and other instructional plates must be read and understood prior to operating the crane.

Load chart

Main boom, hydraulic extension and inserts

142 ft
Fixed lengths

33 ft - 56 ft
72 ft - 88 ft
Hydraulic luffing
swingaway/loads luffing

44,000 lb

100%
24 ft 0 in

360°

Pounds (thousands)

Feet	142.3' + 33'		142.3' + 56'		142.3' + 72'		142.3' + 88'	
	5°-20°	20°-40°	5°-20°	20°-40°	5°-20°	20°-40°	5°-20°	20°-40°
35								
40								
45	13,800							
50	13,800	12,200						
55	13,800	12,200	8130					
60	13,800	11,950	7790		7000			
65	13,350	11,700	7490		7000			
70	12,900	11,500	7210		6810		5520	
75	12,450	11,350	6940	6000	6600	5470	5520	
80	12,100	11,150	6690	5880	6410	5380	5520	4960
85	11,750	11,000	6460	5760	6230	5290	5460	4890
90	11,400	10,850	6260	5660	6050	5210	5400	4820
95	10,950	10,750	6060	5550	5880	5140	5330	4760
100	10,400	10,450	5880	5460	5730	5070	5270	4700
105	9870	9940	5700	5380	5580	5000	5210	4640
110	9290	9460	5550	5300	5450	4940	5140	4590
115	8630	8890	5400	5230	5320	4880	5080	4540
120	7880	8110	5260	5170	5200	4830	5020	4500
125	7200	7400	5130	5110	5080	4780	4970	4450
130	6580	6750	5010	5010	4970	4730	4890	4410
135	6000		4900	4900	4870	4690	4810	4380
140	5480		4780	4790	4780	4660	4720	4340
145	4990		4630	4690	4690	4620	4570	4310
150	4540		4480	4610	4540	4600	4420	4290
155	4130		4340	4520	4410	4520	4280	4260
160			4220		4070	4360	4010	4150
165			3860		3690	3950	3630	3930
170			3510		3340		3270	3550
175			3180		3010		2940	3190
180			2880		2700		2620	2860
185					2410		2330	
190					2130		2050	
195					1880		1790	
200							1530	
205							1260	
210							1010	

THIS CHART IS ONLY A GUIDE AND SHOULD NOT BE USED TO OPERATE THE CRANE.
The individual crane's load chart, operating instructions and other instructional plates must be read and understood prior to operating the crane.

Load charts

Main boom, hydraulic extension and inserts

142 ft
Fixed lengths

33 ft - 56 ft
72 ft - 88 ft
Hydraulic luffing
swingaway/stationary

26,000 lb

100%
24 ft 0 in

360°

Pounds (thousands)

Feet	142.3' + 33'			142.3' + 56'			142.3' + 72'			142.3' + 88'		
	5°	5°-20°	20°-40°	5°	5°-20°	20°-40°	5°	5°-20°	20°-40°	5°	5°-20°	20°-40°
35	13,800											
40	13,800			8600								
45	13,800	13,800		8600								
50	13,800	13,800	12,200	8600			7000			5520		
55	13,800	13,800	12,200	8600	8600		7000			5520		
60	13,800	13,800	12,200	8600	8600		7000	7000		5520		
65	13,800	13,800	12,200	8600	8600		7000	7000		5520		
70	13,800	13,800	12,200	8600	8380		7000	7000		5520	5520	
75	13,550	13,450	12,200	8600	8160	6750	7000	7000	6360	5520	5520	
80	12,000	12,000	12,200	8600	7930	6640	7000	7000	6360	5520	5520	5300
85	10,650	10,650	11,150	8600	7720	6530	7000	7000	6360	5520	5460	5300
90	9490	9490	9930	8600	7530	6440	7000	7000	6360	5520	5400	5300
95	8450	8450	8850	8600	7340	6,350	7000	7000	6350	5520	5330	5300
100	7520	7520	7880	8220	7170	6270	7000	7000	6270	5440	5270	5270
105	6690	6690	7020	7370	7010	6200	7000	7000	6200	5350	5210	5210
110	5950	5950	6250	6610	6610	6140	6510	6510	6140	5270	5140	5140
115	5280	5280	5550	5920	5920	6090	5810	5810	6090	5180	5080	5080
120	4680	4680	4910	5300	5300	5820	5180	5180	5760	5100	5020	5020
125	4130	4130	4330	4730	4730	5210	4610	4610	5140	4580	4580	4970
130	3620	3620	3810	4210	4210	4650	4090	4090	4580	4050	4050	4580
135	3160	3160		3740	3740	4140	3610	3610	4060	3570	3570	4060
140	2740	2740		3300	3300	3670	3170	3170	3590	3120	3120	3580
145	2350	2350		2900	2900	3230	2760	2760	3140	2710	2710	3140
150	1990	1990		2520	2520	2820	2380	2380	2730	2330	2330	2730
155	1660	1660		2180	2180	2440	2030	2030	2350	1980	1980	2340
160	1350			1850	1850		1700	1700	1990	1650	1650	1990
165	1070			1550	1550		1400	1400	1660	1340	1340	1650
170				1270	1270		1110	1110		1050	1050	1340
175				1010	1010							1040

142 ft
Fixed lengths

33 ft - 56 ft
72 ft - 88 ft
Hydraulic luffing
swingaway/loads luffing

26,000 lb

100%
24 ft 0 in

360°

Pounds (thousands)

Feet	142.3' + 33'		142.3' + 56'		142.3' + 72'		142.3' + 88'	
	5°-20°	20°-40°	5°-20°	20°-40°	5°-20°	20°-40°	5°-20°	20°-40°
35								
40								
45	13,800							
50	13,800	12,200						
55	13,800	12,200	8130					
60	13,800	11,950	7790		7000			
65	13,350	11,700	7490		7000			
70	12,900	11,500	7210		6810		5520	
75	12,450	11,350	6940	6000	6600	5470	5520	
80	12,000	11,150	6690	5880	6410	5380	5520	4960
85	10,650	11,000	6460	5760	6230	5290	5460	4890
90	9490	9930	6260	5660	6050	5210	5400	4820
95	8450	8850	6060	5550	5880	5140	5330	4760
100	7520	7880	5880	5460	5730	5070	5270	4700
105	6690	7020	5700	5380	5580	5000	5210	4640
110	5950	6250	5550	5300	5450	4940	5140	4590
115	5280	5550	5400	5230	5320	4880	5080	4540
120	4680	4910	5260	5170	5180	4830	5020	4500
125	4130	4330	4730	5110	4610	4780	4580	4450
130	3620	3810	4210	4650	4090	4580	4050	4410
135	3160		3740	4140	3610	4060	3570	4060
140	2740		3300	3670	3170	3590	3120	3580
145	2350		2900	3230	2760	3140	2710	3140
150	1990		2520	2820	2380	2730	2330	2730
155	1660		2180	2440	2030	2350	1980	2340
160			1850		1700	1990	1650	1990
165			1550		1400	1660	1340	1650
170			1270		1110		1050	1340
175			1010					1040

THIS CHART IS ONLY A GUIDE AND SHOULD NOT BE USED TO OPERATE THE CRANE.
The individual crane's load chart, operating instructions and other instructional plates must be read and understood prior to operating the crane.

11,2 m - 43,4 m (33 ft - 56 ft) folding boom extension (luffing or manual)		
	298 kg (657 lb) hook block	
	Without	With
*33 ft extension (erected)	2994 kg (6600 lb)	4899 kg (10,800 lb)
*56 ft extension (erected)	5579 kg (12,300 lb)	8754 kg (19,300 lb)

*Reduction of main boom capacities

When lifting over main boom nose with 11,2 m or 43,4 m (33 ft or 56 ft) extension erected, the outriggers must be fully extended or 50% extended (4,7 m [15 ft 5 in] spread)

NOTE: All load handling devices and boom attachments are considered part of the load and suitable allowances MUST BE MADE for their combined weights. Weights are for Grove furnished equipment.

Auxiliary boom nose	60 kg (133 lb)

Hook blocks and headache balls:	
73 t (80 Ust), 5-sheave	730 kg (1609 lb) +
55 t (60 USt), 5-sheave	581 kg (1281 lb) +
36,3 t (40 Ust), 3-sheave	462 kg (1019 lb) +
22,7 t (25 Ust), 1-sheave	298 kg (657 lb) +
7,5 t (8.3 Ust), overhaul ball	161 kg (355 lb) +

+ Refer to rating plate for actual weight.

When lifting over extension and/or jib combinations, deduct total weight of all load handling devices reeved over main boom nose directly from swingaway or jib capacity.

Hoists	Cable specs	Permissible line pulls	Nominal cable length
Main and auxiliary	19 mm (3/4 in) Caser Eurolift Rotation Resistant Min. breaking strength 35 690 kg (78,683 lb)	7138 kg (15,736 lb)	225 m (738 ft)
Main and auxiliary	19 mm (3/4 in) Endurance Dyform 34 LR Rotation Resistant, Left Lang Lay Min. Breaking Strength 36 287 kg (80,000 lb)	7138 kg (15,736 lb)	225 m (738 ft)
Main and auxiliary	19 mm (3/4 in) 35x7 Class Rotation Resistant Min. breaking strength 38 918 kg (85,800 lb)	7784 kg (17,160 lb)	214 m (702 ft)

The approximate weight of 19 mm (3/4 in) wire rope is 2.2 kg/m (1.5 lb/ft)

Hoist performance

Wire rope layer	Hoist line pools	Drum rope capacity m (ft)	
	Available kg (lb)*	Layer	Total
1	10 034 kg (22,122 lb)	33,5 m (109.95 ft)	33,5 m (109.95 ft)
2	9184 kg (20,247 lb)	36,6 m (120.14 ft)	70,1 m (230.09 ft)
3	8466 kg (18,665 lb)	39,7 m (130.32 ft)	109,9 m (360.41 ft)
4	7853 kg (17,312 lb)	42,8 m (140.50 ft)	152,7 m (500.91 ft)
5	7321 kg (16,142 lb)	45,9 m (150.68 ft)	198,6 m (651.59 ft)
6	6858 kg (15,120 lb)	49,0 m (160.87 ft)	247,6 m (812.46 ft)

*Max lifting capacity

19 mm Casar Eurolift: 7138 kg (15,736 lb)

19 mm 35x7 Class: 7784 kg (17,160 lb)

Working area diagram

Bold lines determine the limiting position of any load for operation within working areas indicated.

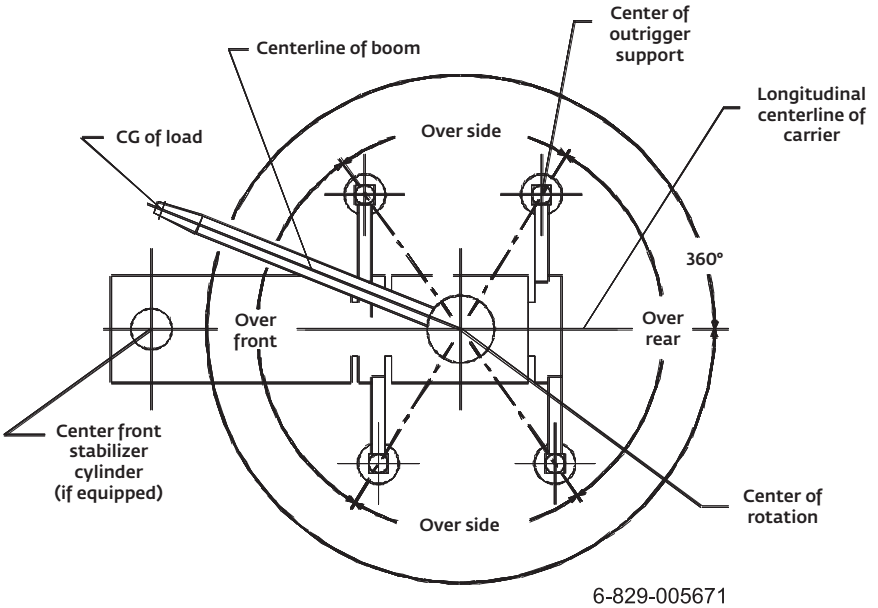

THIS CHART IS ONLY A GUIDE AND SHOULD NOT BE USED TO OPERATE THE CRANE.
The individual crane's load chart, operating instructions and other instructional plates must be read and understood prior to operating the crane.

Working range

Main boom and manual extension (metric)

11,2 m - 43,4 m main boom and manual lattice extension

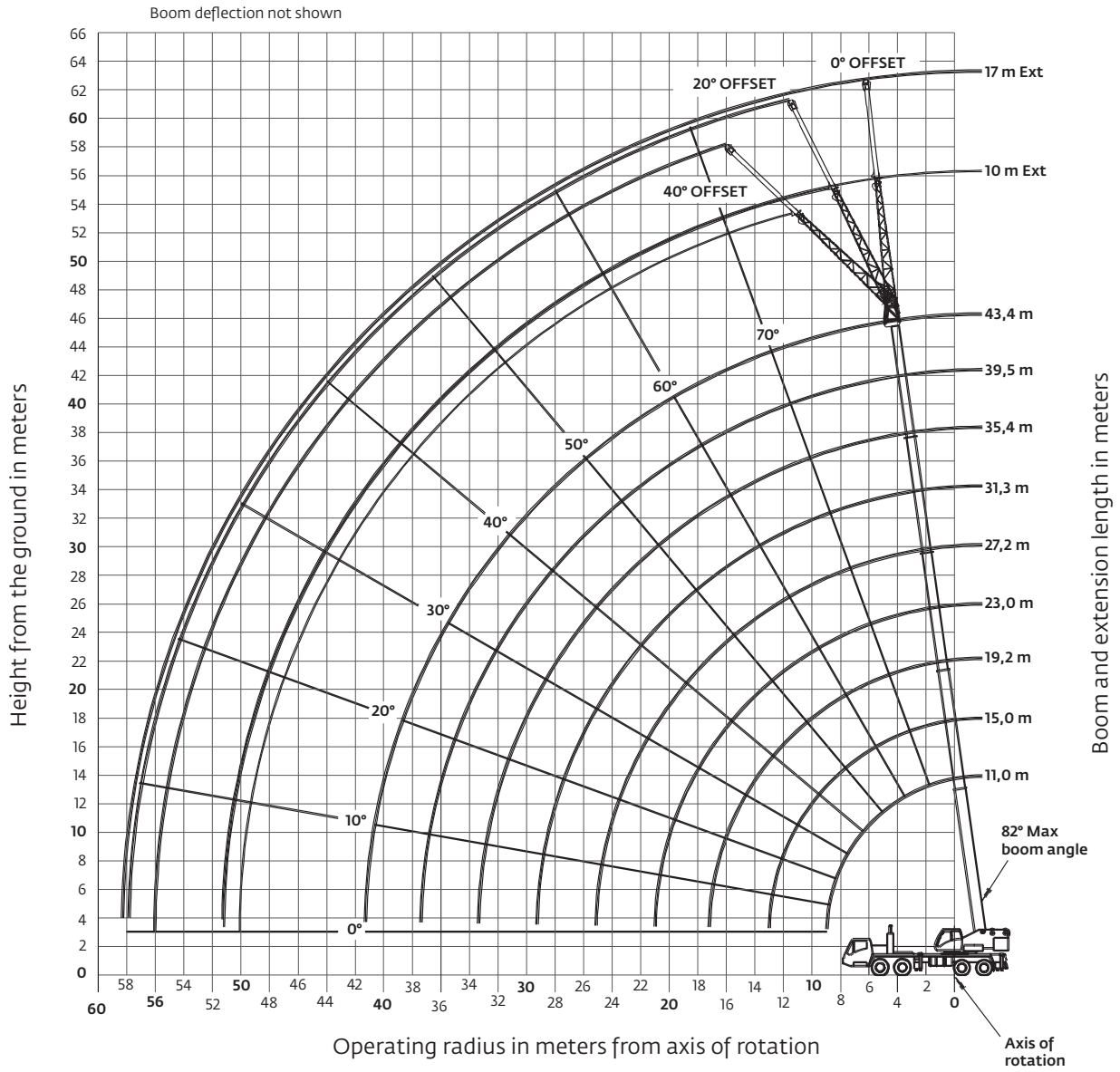

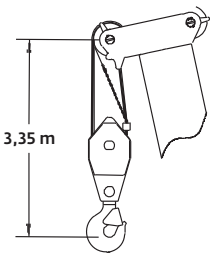

Dimensions area for largest Grove furnished hookblock and headache ball, with anti-two block activated.

THIS CHART IS ONLY A GUIDE AND SHOULD NOT BE USED TO OPERATE THE CRANE.

The individual crane's load chart, operating instructions and other instructional plates must be read and understood prior to operating the crane.

11,2 m - 43,4 m
Fixed lengths

22 000 kg

100%
7,3 m

360°

Kilograms (thousands)

Meters	11,0	15,0	19,0	23,0	27,1	31,2	35,3	39,4	43,4
2,5	*90 000								
3	75 000	63 100	59 500	55 800	37 625				
4	65 050	62 850	59 000	51 025	37 625	27 175			
5	56 300	54 700	52 475	50 150	37 625	27 175			
6	48 675	48 375	46 375	45 600	37 150	27 175	20 175	15 175	
7	41 850	42 325	41 500	40 825	34 900	26 625	20 175	15 175	12 075
8	34 775	37 025	36 375	36 850	32 425	25 000	20 175	15 175	12 075
9		32 450	32 400	32 525	30 050	22 975	20 175	15 175	12 075
10		28 525	28 800	28 600	28 050	21 300	19 025	15 175	12 075
11		25 300	25 500	25 175	25 775	19 800	17 775	15 175	12 075
12		22 425	22 675	22 350	22 950	18 450	16 650	15 075	12 075
13			20 325	20 425	20 625	17 250	15 375	14 225	12 075
14			18 325	19 025	18 650	16 175	14 450	13 425	12 075
15			17 000	17 350	16 975	15 025	13 600	12 675	11 900
16			15 825	15 875	15 525	14 225	12 825	11 975	11 375
18				13 325	13 000	12 975	11 475	10 750	10 275
20				11 350	11 050	11 350	10 325	9705	9330
22					9785	9830	9165	8800	8490
24					8895	8585	8475	8020	7440
26						7545	7590	7040	6820
28						6690	6855	6310	6275
30							6100	5875	5780
32							5460	5425	5150
34								4865	4600
36								4375	4115
38									3680
40									3300

**Requires special equipment.*

11,2 m - 43,4 m
Fixed lengths

20 000 kg

100%
7,3 m

360°

Kilograms (thousands)

Meters	11,0	15,0	19,0	23,0	27,1	31,2	35,3	39,4	43,4
3	75 000	63 100	59 500	55 800	37 625				
4	65 050	62 850	59 000	51 025	37 625	27,175			
5	56 300	54 700	52 475	50 150	37 625	27,175			
6	48 375	48 375	46 375	45 600	37 ,150	27,175	20 175	15 175	
7	41 625	42 325	41 500	40 825	34 900	26,625	20 175	15 175	12 075
8	34 775	36 300	35 ,725	36 375	32 425	25,000	20 175	15 175	12 075
9		31 475	31 750	31 550	30 050	22,975	20 175	15 175	12 075
10		27 650	27 925	27 575	28 050	21,300	19 025	15 175	12 075
11		24 350	24 550	24 225	24 825	19,800	17 775	15 175	12 075
12		21 575	21 825	21 800	22 100	18,450	16 650	15 075	12 075
13			19 550	20 225	19 825	17,250	15 375	14 225	12 075
14			17 975	18 300	17 925	16,175	14 450	13 425	12 075
15			16 550	16 500	16 150	15,025	13 600	12 675	11 900
16			15 000	14 975	14 625	14,225	12 825	11 975	11 375
18				12 550	12 200	12,550	11 475	10 750	10 275
20				10 665	10 600	10,675	10 000	9705	9330
22					9545	9,210	9150	8725	8490
24					8335	8,025	8155	7540	7440
26						7,060	7210	6805	6820
28						6,360	6385	6310	6045
30							5665	5625	5345
32							5055	5020	4745
34								4485	4225
36								4020	3760
38									3345
40									2980

THIS CHART IS ONLY A GUIDE AND SHOULD NOT BE USED TO OPERATE THE CRANE.
The individual crane's load chart, operating instructions and other instructional plates must be read and understood prior to operating the crane.

Load charts
Main boom (metric)

11,2 m - 43,4 m
Fixed lengths

11 800 kg

100%
7,3 m

360°

Kilograms (thousands)

Meters	11,0	15,0	19,0	23,0	27,1	31,2	35,3	39,4	43,4
3	75 000	63 100	59 500	55 800	37 625				
4	65 050	62 850	59 000	51 025	37 625	27 175			
5	53 800	54 525	52 475	50 150	37 625	27 175			
6	44 275	45 200	44 525	45 100	37 150	27 175	20 175	15 175	
7	36 625	37 525	37 825	37 525	34 900	26 625	20 175	15 175	12 075
8	31 000	31 900	32 175	31 850	32 425	25 000	20 175	15 175	12 075
9		27 300	27 400	27 400	27 700	22 975	20 175	15 175	12 075
10		23 625	23 500	24 025	23 575	21 300	19 025	15 175	12 075
11		20 200	20 650	20 600	20 175	19 725	17 775	15 175	12 075
12		17 475	17 975	17 900	17 525	17 575	16 650	15 075	12 075
13			15 825	15 775	15 375	15 750	14 975	14 225	12 075
14			14 100	14 050	14 225	14 050	13 475	13 425	12 075
15			12 625	12 600	12 950	12 575	12 575	12 050	11 900
16			11 375	11 400	11 725	11 350	11 500	11 025	11 125
18				9915	9760	9850	9550	9485	9175
20				8380	8260	8370	8180	7985	7680
22					7085	7215	7040	6850	6560
24					6220	6250	6070	5880	5590
26						5440	5260	5075	4785
28						4765	4585	4400	4115
30							4015	3830	3545
32							3525	3340	3060
34								2920	2640
36								2550	2270
38									1945
40									1660

11,2 m - 43,4 m
Fixed lengths

5000 kg

100%
7,3 m

360°

Kilograms (thousands)

Meters	11,0	15,0	19,0	23,0	27,1	31,2	35,3	39,4	43,4
3	75 000	63 100	59 500	55 800	37 625				
4	62 100	62 825	59 000	51 025	37 625	27 175			
5	49 150	50 125	49 300	49 925	37 625	27 175			
6	39 275	40 200	40 450	40 100	37 150	27 175	20 175	15 175	
7	32 400	33 250	33 375	32 975	33 675	26 625	20 175	15 175	12 075
8	25 550	26 775	27 325	27 250	26 750	25 000	20 175	15 175	12 075
9		21 650	22 150	22 075	21 650	21 125	20 175	15 175	12 075
10		18 000	18 475	18 425	18 275	18 400	17 525	15 175	12 075
11		15 275	15 725	15 675	16 075	15 650	15 700	15 050	12 075
12		13 100	13 625	14 150	13 975	13 775	13 725	13 650	12 075
13			11 900	12 425	12 250	12 400	12 175	11 950	11 600
14			10 550	10 950	10 925	10 925	10 725	10 475	10,150
15			9350	9750	9720	9715	9510	9285	8945
16			8340	8730	8695	8690	8490	8270	7940
18				7140	7115	7115	6925	6725	6140
20				5920	5895	5895	5710	5515	5210
22					4945	4940	4760	4570	4270
24					4180	4180	4000	3810	3515
26						3555	3375	3185	2900
28						3030	2855	2670	2385
30							2415	2230	1945
32							2035	1855	1575
34								1530	1250
36								1245	965
38									720
40									500

THIS CHART IS ONLY A GUIDE AND SHOULD NOT BE USED TO OPERATE THE CRANE.
The individual crane's load chart, operating instructions and other instructional plates must be read and understood prior to operating the crane.

Load chart
Main boom (metric)

11,2 m - 43,4 m
Fixed lengths

0 kg

100%
7,3 m

360°

Kilograms (thousands)

Meters	11,0	15,0	19,0	23,0	27,1	31,2	35,3	39,4	43,4
3	72 675	63 100	59 500	55 800	37 625				
4	58 875	59 775	58 850	51 025	37 625	27 175			
5	44 675	45 650	45 800	45 450	37 625	27 175			
6	35 325	36 250	36 400	36 125	36 775	27 175	20 175	15 175	
7	25 900	27 200	27 825	27 750	27 200	26 575	20 175	15 175	12 075
8	19 700	20 950	21 500	21 425	20 950	21 425	20 175	15 175	12 075
9		16 800	17 300	17 675	17 700	17 225	17 425	15 175	12 075
10		13 625	14 175	14 775	14 550	14 725	14 475	14 250	12 075
11		11 300	11 900	12 375	12 350	12 350	12 125	11 875	11 475
12		9525	10 100	10 550	10 525	10 525	10 300	10 050	9690
13			8690	9125	9095	9095	8880	8640	8280
14			7550	7965	7935	7935	7720	7490	7205
15			6625	7035	7015	7020	6820	6605	6270
16			5830	6235	6215	6215	6020	5810	5485
18				4975	4945	4950	4760	4560	4245
20				4020	3995	3995	3810	3615	3310
22					3250	3250	3065	2875	2575
24					2650	2650	2470	2280	1990
26						2165	1985	1795	1510
28						1755	1580	1390	1105
30							1235	1050	770
32							940	760	
34								505	

THIS CHART IS ONLY A GUIDE AND SHOULD NOT BE USED TO OPERATE THE CRANE.
The individual crane's load chart, operating instructions and other instructional plates must be read and understood prior to operating the crane.

Working range

Main boom, manual extension and inserts (metric)

11,2 m - 43,4 m main boom, manual lattice extension and two 5 m inserts

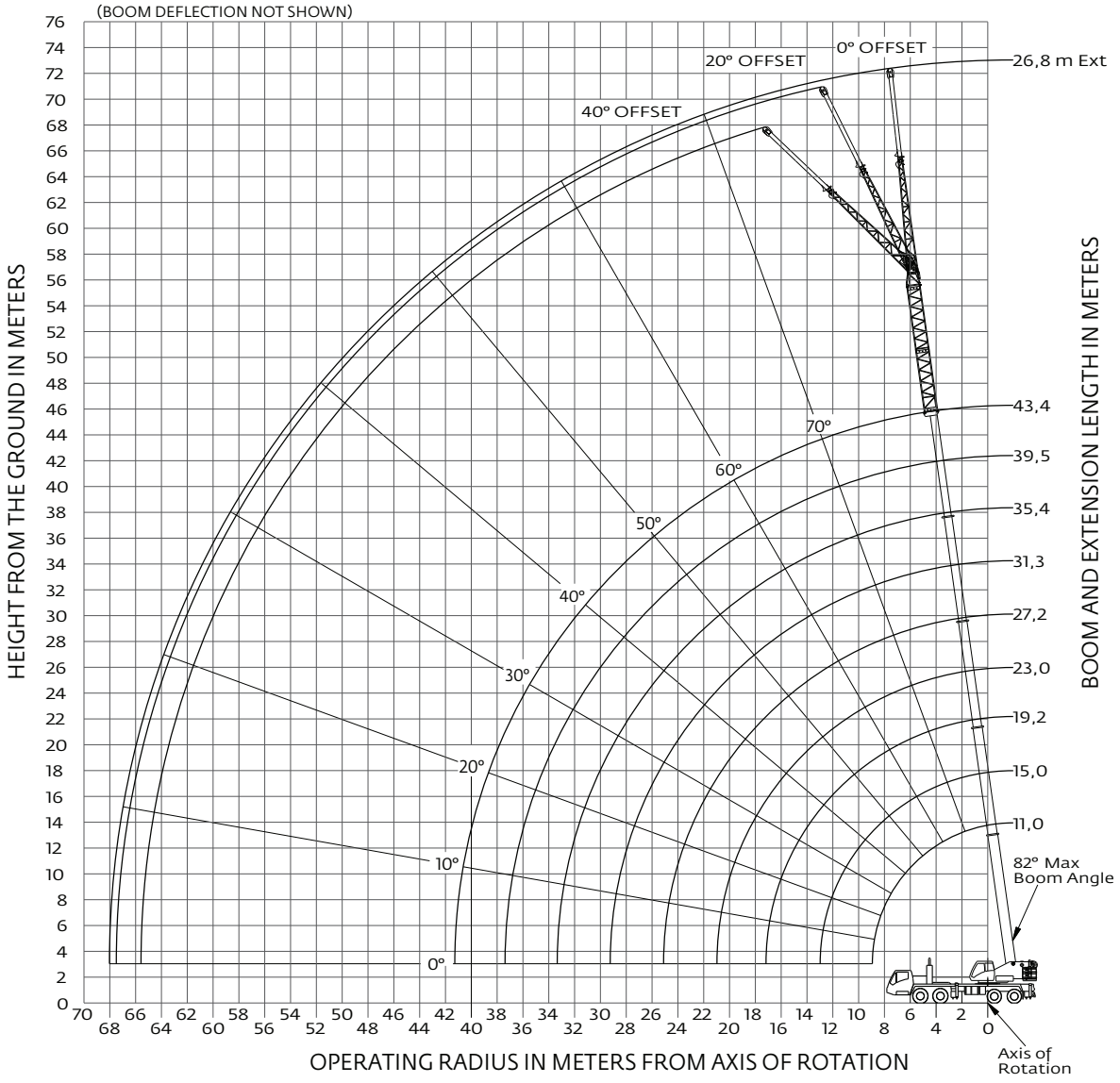

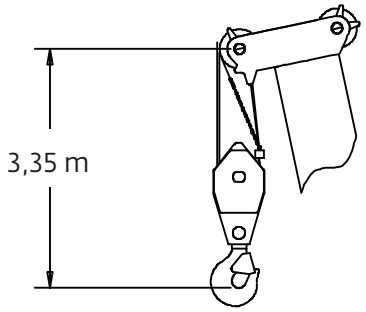

Dimensions area for largest Grove furnished hookblock and headache ball, with anti-two block activated.

THIS CHART IS ONLY A GUIDE AND SHOULD NOT BE USED TO OPERATE THE CRANE.
The individual crane's load chart, operating instructions and other instructional plates must be read and understood prior to operating the crane.

43,4 m
Fixed lengths

10 m - 17 m
21,9 m - 26,8 m
Manual offsettable swingaway

22 000 kg

100%
7,3 m

360°

Kilograms (thousands)

Meters	43,4 + 10			43,4 + 17			43,4 + 21,9			43,4 + 26,8		
	0°	20°	40°	0°	20°	40°	0°	20°	40°	0°	20°	40°
9	6195											
10	6195											
11	6195			3845								
12	6195			3845								
13	6195			3845								
14	6195	6465		3845			3145					
15	6195	6465	5550	3845			3145			2500		
16	6195	6465	5550	3845			3145			2500		
18	6195	6465	5550	3845	3935		3145	3375		2500		
20	6195	6465	5550	3845	3895		3145	3375		2500	2605	
22	6195	6280	5550	3845	3755		3145	3375		2500	2565	
24	5970	5940	5550	3845	3625	3025	3145	3375	2905	2500	2525	
26	5555	5545	5,550	3845	3500	2960	3145	3365	2905	2500	2485	2450
28	5175	5175	5285	3845	3385	2905	3145	3310	2900	2500	2445	2435
30	4825	4840	4945	3845	3280	2855	3145	3255	2855	2500	2410	2405
32	4475	4530	4630	3845	3185	2815	3145	3195	2815	2470	2370	2375
34	4135	4245	4345	3750	3095	2780	3145	3075	2780	2415	2335	2350
36	3825	3925	4050	3585	3020	2750	3085	2950	2750	2365	2300	2325
38	3545	3635	3740	3375	2950	2730	2950	2835	2725	2315	2265	2295
40	3225	3340	3375	3180	2885	2715	2825	2725	2705	2265	2225	2255
42	2885	2975		2995	2830	2705	2660	2625	2660	2215	2180	2215
44	2580	2650		2785	2785	2705	2500	2530	2575	2130	2095	2150
46	2305	2355		2505	2680	2705	2350	2440	2500	2035	2010	2065
48	2060	2085		2250	2400		2175	2295	2420	1945	1930	1990
50	1840			2015	2140		1940	2105	2180	1845	1855	1915
52				1805	1900		1725	1865		1685	1785	1850
54				1610	1680		1525	1650		1485	1640	1710
56				1435			1345	1445		1300	1440	
58				525			1180	1255		1135	1250	
60							1030			980	1075	
62							895			835	910	
64										700	755	
66										585		

43,4 m
Fixed lengths

10 m - 17 m
21,9 m - 26,8 m
Manual offsettable swingaway

20 000 kg

100%
7,3 m

360°

Kilograms (thousands)

Meters	43,4 + 10			43,4 + 17			43,4 + 21,9			43,4 + 26,8		
	0°	20°	40°	0°	20°	40°	0°	20°	40°	0°	20°	40°
9	6195											
10	6195											
11	6195			3845								
12	6195			3845								
13	6195			3845								
14	6195	6465		3845			3145					
15	6195	6465	5550	3845			3145			2500		
16	6195	6465	5550	3845			3145			2500		
18	6195	6465	5550	3845	3935		3145	3375		2500		
20	6195	6465	5550	3845	3895		3145	3375		2500	2605	
22	6195	6280	5550	3845	3755		3145	3375		2500	2565	
24	5970	5940	5550	3845	3625	3025	3145	3375	2905	2500	2525	
26	5555	5545	5550	3845	3500	2960	3145	3365	2905	2500	2485	2450
28	5175	5175	5285	3845	3385	2905	3145	3310	2900	2500	2445	2435
30	4825	4840	4945	3845	3280	2855	3145	3255	2855	2500	2410	2405
32	4475	4530	4630	3845	3185	2815	3145	3195	2815	2470	2370	2375
34	4135	4245	4345	3750	3095	2780	3145	3075	2780	2415	2335	2350
36	3680	3835	3910	3585	3020	2750	3085	2950	2750	2365	2300	2325
38	3275	3405	3460	3375	2950	2730	2950	2835	2725	2315	2265	2295
40	2910	3020	3060	3125	2885	2715	2825	2725	2705	2265	2225	2255
42	2585	2675		2795	2830	2705	2660	2625	2660	2215	2180	2215
44	2295	2365		2500	2705	2705	2430	2530	2575	2130	2095	2150
46	2035	2085		2230	2410	2490	2160	2375	2495	2035	2010	2065
48	1795	1825		1985	2140		1915	2105	2200	1880	1930	1990
50	1590			1765	1890		1690	1855	1930	1655	1850	1915
52				1565	1665		1485	1630		1445	1620	1710
54				1380	1450		1295	1420		1255	1410	1480
56				1215			1125	1225		1080	1215	
58				525			970	1040		920	1035	
60							825			770	870	
62							695			635	710	
64										510	560	

THIS CHART IS ONLY A GUIDE AND SHOULD NOT BE USED TO OPERATE THE CRANE.
The individual crane's load chart, operating instructions and other instructional plates must be read and understood prior to operating the crane.

Load chart

Main boom, manual extension and inserts (metric)

43,4 m
Fixed lengths

10 m - 17 m
21,9 m - 26,8 m
Manual offsettable swingaway

11 800 kg

100%
7,3 m

360°

Kilograms (thousands)

Meters	43,4 + 10			43,4 + 17			43,4 + 21,9			43,4 + 26,8		
	0°	20°	40°	0°	20°	40°	0°	20°	40°	0°	20°	40°
9	6195											
10	6195											
11	6195			3845								
12	6195			3845								
13	6195			3845								
14	6195	6465		3845			3145					
15	6195	6465	5550	3845			3145			2500		
16	6195	6465	5550	3845			3145			2500		
18	6195	6465	5550	3845	3935		3145	3375		2500		
20	6195	6465	5550	3845	3895		3145	3375		2500	2605	
22	6195	6280	5550	3845	3755		3145	3375		2500	2565	
24	5560	5895	5550	3845	3625	3025	3145	3375	2905	2500	2525	
26	4755	5055	5265	3845	3500	2960	3145	3365	2905	2500	2485	2450
28	4075	4340	4520	3845	3385	2905	3145	3310	2900	2500	2445	2435
30	3500	3730	3880	3760	3280	2855	3145	3255	2855	2500	2410	2405
32	3005	3210	3335	3255	3185	2815	3145	3195	2815	2470	2370	2375
34	2580	2755	2860	2820	3095	2780	2770	3075	2780	2415	2335	2350
36	2205	2360	2440	2440	2775	2750	2390	2750	2750	2365	2300	2325
38	1875	2010	2065	2105	2405	2605	2050	2380	2610	2030	2265	2295
40	1580	1695	1735	1805	2075	2245	1750	2045	2250	1725	2045	2255
42	1320	1415		1540	1775	1920	1480	1750	1925	1455	1750	1950
44	1090	1165		1300	1510	1620	1235	1480	1630	1210	1480	1655
46	880	935		1085	1265	1350	1020	1235	1360	990	1235	1385
48	695	725		890	1045		820	1015	1115	790	1010	1140
50	530			715	840		640	810	885	610	805	915
52				555	655			625			620	705
54												515

THIS CHART IS ONLY A GUIDE AND SHOULD NOT BE USED TO OPERATE THE CRANE.

The individual crane's load chart, operating instructions and other instructional plates must be read and understood prior to operating the crane.

11,2 m - 43,4 m main boom, hydraulic lattice extension and two 5 m inserts

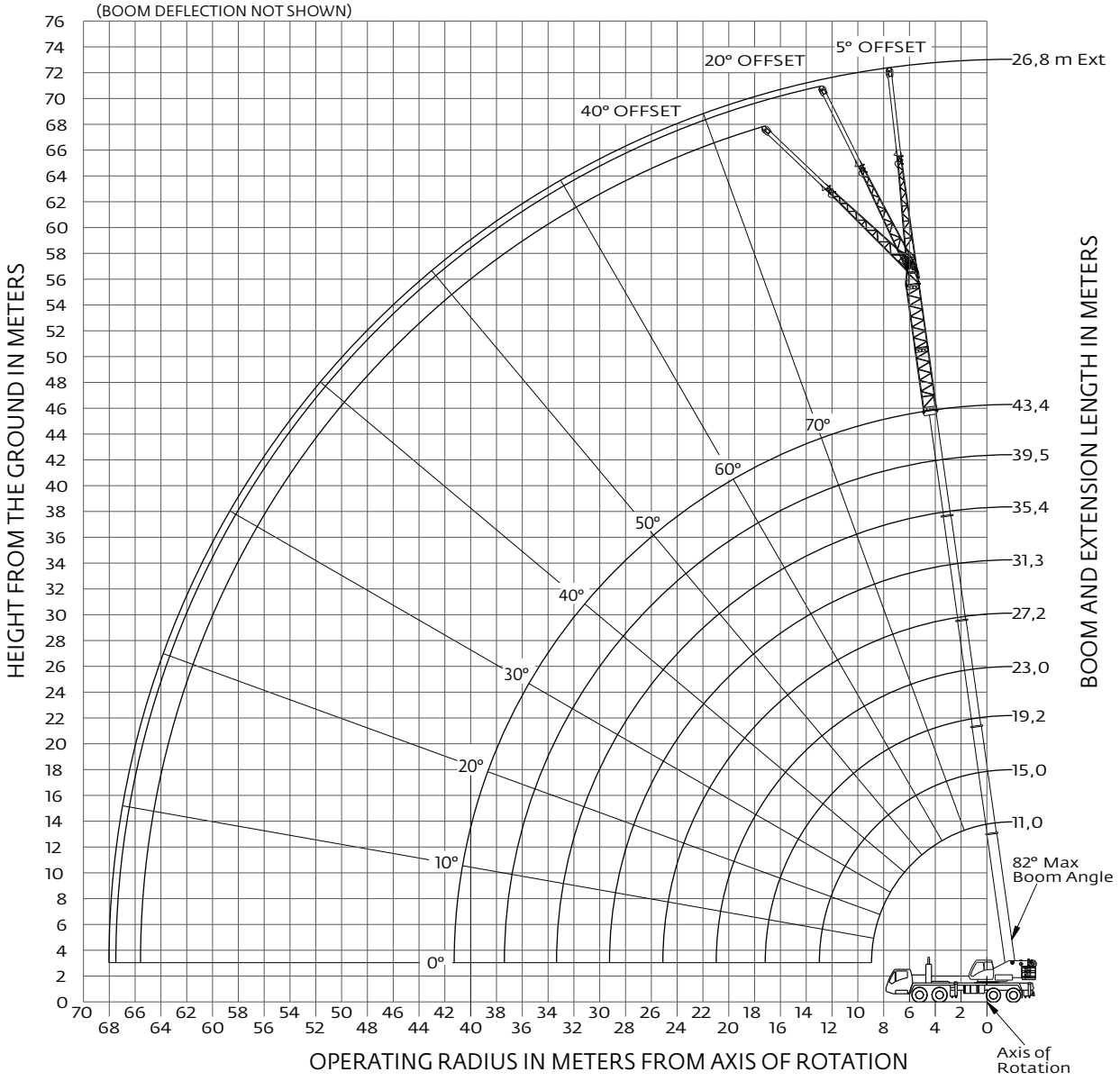

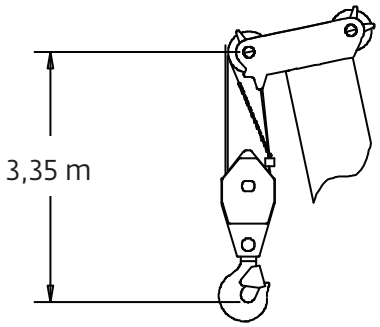

Dimensions area for largest Grove furnished hookblock and headache ball, with anti-two block activated.

THIS CHART IS ONLY A GUIDE AND SHOULD NOT BE USED TO OPERATE THE CRANE.
The individual crane's load chart, operating instructions and other instructional plates must be read and understood prior to operating the crane.

Load charts

Main boom, hydraulic extension and inserts (metric)

43,4 m
Fixed lengths

10 m - 17 m
21,9 m - 26,8 m
Hydraulic luffing
swingaway/stationary

22 000 kg

100%
7,3 m

360°

Kilograms (thousands)

Meters	43,4 + 10			43,4 + 17			43,4 + 21,9			43,4 + 26,8		
	5°	5°-20°	20°-40°	5°	5°-20°	20°-40°	5°	5°-20°	20°-40°	5°	5°-20°	20°-40°
11	6275											
12	6275			3895								
13	6275			3895								
14	6275	6275		3895			3155					
15	6275	6275	5540	3895			3155			2500		
16	6275	6275	5540	3895			3155			2500		
18	6275	6275	5540	3895	3895		3155	3155		2500		
20	6275	6275	5540	3895	3895		3155	3155		2500	2500	
22	6275	6265	5540	3895	3755		3155	3155		2500	2500	
24	5930	5920	5540	3895	3625	3025	3155	3155	2895	2500	2500	
26	5520	5520	5525	3895	3495	2960	3155	3155	2895	2500	2475	2435
28	5145	5145	5155	3895	3380	2905	3155	3155	2895	2500	2435	2425
30	4800	4800	4820	3830	3275	2855	3155	3155	2855	2480	2400	2395
32	4475	4475	4510	3690	3180	2815	3155	3155	2815	2430	2360	2360
34	4135	4135	4220	3550	3095	2780	3155	3060	2780	2380	2325	2325
36	3825	3825	3905	3420	3020	2750	3020	2935	2745	2330	2290	2290
38	3545	3545	3615	3300	2950	2725	2895	2820	2725	2280	2255	2255
40	3235	3235	3310	3175	2885	2715	2770	2710	2705	2230	2210	2210
42	2885	2885		2990	2830	2705	2655	2610	2610	2180	2170	2170
44	2575	2575		2810	2785	2705	2495	2495	2515	2095	2080	2080
46	2295	2295		2530	2530	2660	2345	2345	2420	2005	1995	1995
48	2045	2045		2270	2270		2195	2195	2270	1915	1910	1910
50	1815			2030	2030		1955	1955	2075	1835	1835	1835
52				1810	1810		1735	1735		1705	1705	1765
54				1610	1610		1530	1530		1500	1500	1610
56				1420			1335	1345		1300	1310	
58							1140	1175		1110	1135	
60							960			930	975	
62							790			760	830	
64										605	690	

43,4 m
Fixed lengths

10 m - 17 m
21,9 m - 26,8 m
Hydraulic luffing
swingaway/loads luffing

22 000 kg

100%
7,3 m

360°

Kilograms (thousands)

Meters	43.4 + 10		43.4 + 17		43.4 + 21.9		43.4 + 26.8	
	5°-20°	20°-40°	5°-20°	20°-40°	5°-20°	20°-40°	5°-20°	20°-40°
14	6275							
15	6275	5540						
16	6275	5540						
18	6275	5450	3565		3155			
20	6035	5315	3380		3155		2500	
22	5765	5195	3215		3050		2500	
24	5530	5090	3065	2680	2930	2450	2500	
26	5320	4990	2925	2610	2820	2400	2475	2215
28	5130	4910	2805	2550	2715	2355	2435	2175
30	4800	4820	2690	2490	2620	2310	2400	2140
32	4475	4510	2590	2440	2535	2270	2360	2110
34	4135	4220	2495	2395	2455	2230	2325	2075
36	3825	3905	2410	2355	2380	2200	2290	2050
38	3545	3615	2330	2320	2310	2165	2255	2020
40	3235	3310	2260	2260	2245	2140	2210	1995
42	2885		2190	2190	2185	2120	2155	1975
44	2575		2110	2135	2130	2100	2080	1955
46	2295		2020	2080	2050	2080	1995	1940
48	2045		1940		1970	2035	1910	1910
50			1870		1900	1995	1835	1835
52			1800		1735		1705	1765
54			1610		1530		1500	1610
56					1345		1310	
58					1175		1135	
60							975	
62							830	
64							690	

THIS CHART IS ONLY A GUIDE AND SHOULD NOT BE USED TO OPERATE THE CRANE.
The individual crane's load chart, operating instructions and other instructional plates must be read and understood prior to operating the crane.

Load charts

Main boom, hydraulic extension and inserts (metric)

43,4 m
Fixed lengths

10 m - 17 m
21,9 m - 26,8 m
Hydraulic luffing
swingaway/stationary

20 000 kg

100%
7,3 m

360°

Kilograms (thousands)

Meters	43,4 + 10			43,4 + 17			43,4 + 21,9			43,4 + 26,8		
	5°	5°-20°	20°-40°	5°	5°-20°	20°-40°	5°	5°-20°	20°-40°	5°	5°-20°	20°-40°
11	6275											
12	6275			3895								
13	6275			3895								
14	6275	6275		3895			3155					
15	6275	6275	5540	3895			3155			2500		
16	6275	6275	5540	3895			3155			2500		
18	6275	6275	5540	3895	3895		3155	3155		2500		
20	6275	6275	5540	3895	3895		3155	3155		2500	2500	
22	6275	6265	5540	3895	3755		3155	3155		2500	2500	
24	5930	5920	5540	3895	3625	3025	3155	3155	2895	2500	2500	
26	5520	5520	5525	3895	3495	2960	3155	3155	2895	2500	2475	2435
28	5145	5145	5155	3895	3380	2905	3155	3155	2895	2500	2435	2425
30	4800	4800	4820	3830	3275	2855	3155	3155	2855	2480	2400	2395
32	4475	4475	4510	3690	3180	2815	3155	3155	2815	2430	2360	2360
34	4135	4135	4220	3550	3095	2780	3155	3060	2780	2380	2325	2325
36	3700	3700	3810	3420	3020	2750	3020	2935	2745	2330	2290	2290
38	3285	3285	3380	3300	2950	2725	2895	2820	2725	2280	2255	2255
40	3915	2915	2995	3175	2885	2715	2770	2710	2705	2230	2210	2210
42	2585	2585		2835	2830	2705	2655	2610	2610	2180	2170	2170
44	2290	2290		2535	2535	2680	2465	2465	2515	2095	2080	2080
46	2025	2025		2260	2260	2385	2190	2190	2345	2005	1995	1995
48	1785	1785		2010	2010		1935	1935	2075	1910	1910	1910
50	1565			1780	1780		1705	1705	1825	1675	1675	1820
52				1575	1575		1495	1495		1465	1465	1590
54				1380	1380		1305	1305		1270	1270	1380
56				1210			1125	1125		1090	1090	
58							960	960		925	925	
60							810			770	770	
62							645			610	630	
64											500	

43,4 m
Fixed lengths

10 m - 17 m
21,9 m - 26,8 m
Hydraulic luffing
swingaway/loads luffing

20 000 kg

100%
7,3 m

360°

Kilograms (thousands)

Meters	43.4 + 10		43.4 + 17		43.4 + 21.9		43.4 + 26.8	
	5°-20°	20°-40°	5°-20°	20°-40°	5°-20°	20°-40°	5°-20°	20°-40°
14	6275							
15	6275	5540						
16	6275	5540						
18	6275	5450	3565		3155			
20	6035	5315	3380		3155		2500	
22	5765	5195	3215		3050		2500	
24	5530	5090	3065	2680	2930	2450	2500	
26	5320	4990	2925	2610	2820	2400	2475	2215
28	5130	4910	2805	2550	2715	2355	2435	2175
30	4800	4820	2690	2490	2620	2310	2400	2140
32	4475	4510	2590	2440	2535	2270	2360	2110
34	4135	4220	2495	2395	2455	2230	2325	2075
36	3700	3810	2410	2355	2380	2200	2290	2050
38	3285	3380	2330	2320	2310	2165	2255	2020
40	2915	2995	2260	2260	2245	2140	2210	1995
42	2585		2190	2190	2185	2120	2155	1975
44	2290		2110	2135	2130	2100	2080	1955
46	2025		2020	2080	2050	2080	1995	1940
48	1785		1940		1935	2035	1910	1910
50			1780		1705	1825	1675	1820
52			1575		1495		1465	1590
54			1380		1305		1270	1380
56					1125		1090	
58					960		925	
60							770	
62							630	
64							500	

THIS CHART IS ONLY A GUIDE AND SHOULD NOT BE USED TO OPERATE THE CRANE.
The individual crane's load chart, operating instructions and other instructional plates must be read and understood prior to operating the crane.

Load charts

Main boom, hydraulic extension and inserts (metric)

43,4 m
Fixed lengths

10 m - 17 m
21,9 m - 26,8 m
Hydraulic luffing
swingaway/stationary

11 800 kg

100%
7,3 m

360°

Kilograms (thousands)

Meters	43,4 + 10			43,4 + 17			43,4 + 21,9			43,4 + 26,8		
	5°	5°-20°	20°-40°	5°	5°-20°	20°-40°	5°	5°-20°	20°-40°	5°	5°-20°	20°-40°
11	6275											
12	6275			3895								
13	6275			3895								
14	6275	6275		3895			3155					
15	6275	6275	5540	3895			3155			2500		
16	6275	6275	5540	3895			3155			2500		
18	6275	6275	5540	3895	3895		3155	3155		2500		
20	6275	6275	5540	3895	3895		3155	3155		2500	2500	
22	6275	6265	5540	3895	3755		3155	3155		2500	2500	
24	5625	5625	5540	3895	3625	3025	3155	3155	2895	2500	2500	
26	4810	4810	5030	3895	3495	2960	3155	3155	2895	2500	2475	2435
28	4120	4120	4315	3895	3380	2905	3155	3155	2895	2500	2435	2425
30	3540	3540	3705	3830	3275	2855	3155	3155	2855	2480	2400	2395
32	3035	3035	3185	3345	3180	2815	3155	3155	2815	2430	2360	2360
34	2600	2600	2730	2900	2900	2780	2850	2850	2780	2380	2325	2325
36	2220	2220	2335	2510	2510	2750	2455	2455	2725	2330	2290	2290
38	1885	1885	1985	2165	2165	2380	2110	2110	2350	2095	2095	2255
40	1590	1590	1670	1855	1855	2050	1800	1800	2020	1785	1785	2020
42	1325	1325		1585	1585	1755	1520	1520	1720	1505	1505	1720
44	1085	1085		1335	1335	1490	1275	1275	1450	1255	1255	1450
46	875	875		1115	1115	1245	1050	1050	1205	1025	1025	1205
48	680	680		915	915		845	845	985	820	820	980
50	510			730	730		660	660	780	635	635	775
52				560	560							590

43,3 m
Fixed lengths

10 m - 17 m
21,9 m - 26,8 m
Hydraulic luffing
swingaway/loads luffing

11 800 kg

100%
24 ft 0 in

360°

Kilograms (thousands)

Meters	43.4 + 10		43.4 + 17		43.4 + 21.9		43.4 + 26.8	
	5°-20°	20°-40°	5°-20°	20°-40°	5°-20°	20°-40°	5°-20°	20°-40°
14	6275							
15	6275	5540						
16	6275	5540						
18	6275	5450	3565		3155			
20	6035	5315	3380		3155		2500	
22	5765	5195	3215		3050		2500	
24	5530	5090	3065	2680	2930	2450	2500	
26	4810	4990	2925	2610	2820	2400	2475	2215
28	4120	4315	2805	2550	2715	2355	2435	2175
30	3540	3705	2690	2490	2620	2310	2400	2140
32	3035	3185	2590	2440	2535	2270	2360	2110
34	2600	2730	2495	2395	2455	2230	2325	2075
36	2220	2335	2410	2355	2380	2200	2290	2050
38	1885	1985	2165	2320	2110	2165	2095	2020
40	1590	1670	1855	2050	1800	2020	1785	1995
42	1325		1585	1755	1520	1720	1505	1720
44	1085		1335	1490	1275	1450	1255	1450
46	875		1115	1245	1050	1205	1025	1205
48	680		915		845	985	820	980
50			730		660	780	635	775
52			560					590

THIS CHART IS ONLY A GUIDE AND SHOULD NOT BE USED TO OPERATE THE CRANE.
The individual crane's load chart, operating instructions and other instructional plates must be read and understood prior to operating the crane.

Super Structure

Boom
11,2 m - 43,4 m (37 ft - 142 ft) five-section, full power boom with TWIN-LOCK™ boom pinning system. Maximum tip height: 45,8 m (150 ft).

Boom nose
Five nylatron sheaves, mounted on heavy duty tapered roller bearings with removable pin-type rope guards. Quick reeve boom nose. Removable auxiliary boom nose with removable pin type rope guard.

Boom elevation
Single lift cylinder with safety valve provides boom angle from -3° to +82°.

Offsettable lattice extension
10 m - 17 m (33 ft - 56 ft) bi-fold lattice swingaway extension manual offset at 0°, 20°, and 40°.
Maximum tip height: 63,1 m (207 ft).

*Optional offsettable lattice extension
10 m - 17 m (33 ft - 56 ft) bi-fold lattice swingaway extension hydraulically offset from 5° - 40°. Controlled from the crane cab. Maximum tip height: 63,1 m (207 ft).

*Lattice extension
Two 5 m (16 ft) inserts for use with lattice swingaway extension to increase length up to 21,9 m (72 ft) or 26,8 m (88 ft). Maximum tip height: 72,2 m (237 ft)

Load moment and anti-two block system
Load moment and anti-two block system with audio/visual warning and control lever lockout provides electronic display of boom angle, length, radius, tip height, relative load moment, maximum permissible load, load indication and warning of impending two-block condition.

Cab
All aluminum construction cab with acoustical lining is hydraulically tiltable to +20° and includes tinted safety glass, adjustable operator's seat with hydraulic suspension, sliding windows in side and cab rear, hinged front window with wiper, sun visor and window shade. Other features include diesel heater/defroster, armrest integrated crane controls, and ergonomically arranged instrumentation.

Crane control system
Full control of all crane movements using electrical control levers with automatic reset to zero. Controls are integrated with the LMI and engine management system by CAN-BUS. ECOS system with graphic display.

Swing
Two planetary gear boxes with axial piston fixed displacement motors. Infinitely variable to 1.7 rpm. Holding brake and service brake.

Counterweight
7258 kg (16,000 lb) consisting of various sections with hydraulic installation/removal system operated from the cab.

*Optional "Heavy Lift" counterweight package consisting of (2) 4636 kg (10,000 lb) sections in addition to standard, for a total of 16 329 kg (36,000 lb).

*Optional "XL" counterweight package consisting of (2) 1814 kg (4000 lb) and (2) 1021 kg (2250 lb) wing sections in addition to standard and "Heavy Lift" package, for a total of 21 999 kg (48,500 lb).

Hydraulic system
2 separate circuits, 1 axial piston variable displacement pump (load sensing) with electronic power limiting control and 1 gear pump for swing. 2 thermostatically controlled oil coolers keep oil at optimum operating temperature. Tank capacity: 508 l (134 gal)

Hoist
Main and auxiliary hoists are powered by axial piston motor with planetary gear and brake. "Thumb-thumper" hoist drum rotation indicator alerts operator of hoist movement. Standard fifth wrap indication with shutoff.

Hoist line pull:
1st Layer: 10 034 kg (22,122 lb)
3rd Layer: 8466 kg (18,665 lb)
5th Layer: 7322 kg (16,142 lb)

Maximum line speed:
111 m/min (365 fpm)

Maximum permissible line pull:
7621 kg (15,700 lb) 34x7 Rotation Resistant
*Optional 7784 kg (17,160 lb) 35X7 Class

Rope diameter: 19 mm (3/4")

Rope length: 225 m (738 ft)
Casar Eurolift/Endurance Dyform
214 m (702 ft) 35X7 Flex-x

Maximum rope storage: 300 m (984 ft)

Carrier

Chassis
Triple box section, four-axle carrier, fabricated from high strength, low alloy steel with towing and tie-down lugs.

**Denotes optional equipment*

Specifications

Outrigger system
Four hydraulic telescoping, two-stage, double box beam outriggers with inverted jack and integral holding valves. Quick release type outrigger floats 610 mm (24 in) diameter. Three position setting with fully extended, intermediate (50%) extended and fully retracted capacities. Fifth (5th) front jack with self-storing pad and automatic first-retract.

Outrigger Monitoring System (required for North America and Canada).

Maximum outrigger pad load: 49 442 kg (109,000 lb).

Outrigger controls
Located in the superstructure cab and on either side of carrier. Crane level indicators located at all stations. Auto leveling standard.

Engine – North America
Cummins ISX 11.9 six cylinder, turbo charged and after cooled diesel engine. 11.9 L (729 in³) 336 kW (450 bhp) at 1800 rpm. Maximum torque 2102 Nm (1550 lb-ft) at 1400 rpm. 2013 "On Highway" EPA, Carb compliant.

Equipped with engine compression brake, audio-visual engine distress system and ether start aid.

Fuel Requirement: Maximum of 15 ppm sulfur content (Ultra Low Sulfur Diesel). Diesel exhaust fluid required.

Engine – Export
Cummins QSM 11 six cylinder, turbo charged and after cooled diesel engine. 10.8 L (660 in³), 300 kW (402 bhp) at 1800 rpm. Maximum torque 1898 Nm (1400 lb-ft) at 1400 rpm. "Off Highway" Tier lll EPA, Carb and EU Stage IIIA compliant.

Equipped with engine compression brake, audio-visual engine distress system and ether start aid.

Fuel Requirement: Maximum of 5000 ppm sulfur content.

Fuel tank capacity
376 L (100 gal)

Transmission
Roadranger 11 speeds forward, 3 reverse, manual.

Steering
Front axles, single circuit, mechanical steering with hydraulic power assist. Turning radius: 13,7 m (45.1 ft).

Axles
Front: (2) beam-type steering axles, 2,12 m (83.4 in) track.
Rear: (2) single reduction drive axles, 1,89 m (74.5 in) track. Inter-axle differential locks.
Drive: 8 x 4 x 4.

Brakes
S-cam, dual air split system operating on all wheels. Spring-applied, air released parking brake acting on rear axles. Air dryer. ABS with traction control.

**Denotes optional equipment*

Suspension
Front: Walking beam with air bags and shock absorbers.
Rear: Walking beam with air bags and shock absorbers.

Tires
Front: 445/65R 22.5 tubeless, mounted on aluminum disc wheels.
Rear: 315/80R 22.5 tubeless, mounted on aluminum disc outer wheels, inner wheels steel.

Lights
Full lighting package including turn indicators, head, tail, brake, and hazard warning lights.
Meets FMVSS and CMVSS standards.

Cab
One man design, aluminum fabricated with acoustical lining and tinted safety glass throughout. Deluxe fabric covered seat with air adjustment. Complete driving controls and engine instrumentation including tilt telescope steering wheel, tachometer, speedometer, voltmeter, water temp., oil pressure, fuel level, air pressure gauge, engine high temp./low oil pressure A/V warning. Other standard items include hot water heater/defroster, electric windshield wash/wipe, fire extinguisher, seat belt and door lock.

Electrical system
Four maintenance-free batteries provide 24 V electrical system. Standard battery disconnect.

Maximum speed
105 kph (65 mph)

Gradeability (theoretical)
70%

Miscellaneous standard equipment
Aluminum fenders with rear storage compartments; dual rear view mirrors; electronic back-up alarm; sling/tool box; tire inflation kit; air cleaner restriction indicator; headache ball stowage; air conditioning; traction control; air horn; hoist access platform; CraneSTAR asset management system.

*Optional equipment
- Auxiliary Lighting and Convenience Package: Includes amber strobe light for superstructure and carrier cab, and boom mounted aircraft warning light (fully wired)
- Dual boom base mounted floodlights
- Hook blocks
- Pintle hook (rear)
- Trailing Boom Package
- Aluminum outrigger pads
- Counterweight packages
- Tow cable
- Wind speed indicator
- Winterfront radiator cover
- Additional storage
- Counterweight slings
- Cross axle differential locks
- 360° house lock

Symbols glossary

Axles

Counterweight

Grade

Outriggers

Boom

Drive

Height (no max)

Radius

Boom elevation

Electrical system

Heavy duty jib

Rotation

Boom extension

Engine

Hoist

Speed

Boom length

Extension

Hookblock

Steering

Boom nose

Frame

Hydraulic system

Suspension

Brakes

Fuel tank capacity

Lights

Swing

Cab

Gear

Oil

Tires

Outrigger controls

Transmission

Manitowoc Cranes

Regional headquarters

Americas
Manitowoc, Wisconsin, USA
Tel: +1 920 684 6621
Fax: +1 920 683 6277

Shady Grove, Pennsylvania, USA
Tel: +1 717 597 8121
Fax: +1 717 597 4062

Europe, Middle East, Africa
Dardilly, France
Tel: +33 (0)4 72 18 20 20
Fax: +33 (0)4 72 18 20 00

China
Shanghai, China
Tel: +86 21 6457 0066
Fax: +86 21 6457 4955

Greater Asia-Pacific
Singapore
Tel: +65 6264 1188
Fax: +65 6862 4040

Manitowoc Crane Care

Manitowoc Crane Care when you need it.

The assurance of the world's most advanced crane service and support to get you back to work fast.

Manitowoc Finance

Manitowoc Finance helps you get right to work generating profits for your business.

Financial tools that help you capitalize on opportunity with solutions that fit your needs.

This document is non-contractual. Constant improvement and engineering progress make it necessary that we reserve the right to make specification, equipment, and price changes without notice. Illustrations shown may include optional equipment and accessories and may not include all standard equipment.

©2015 Manitowoc
Form No. TMS9000E PG
Part No. 08-005-1M-0715